© Siemens 2025

SIEMENS

MOTION CONTROL DRIVES

SINAMICS S200

Servo drive system

siemens.com/d37-1

Catalog
D 37.1

Edition
November
2025

Next
Generation

Siemens
EcoTech

© Siemens 2025

Related catalogs

Motion Control Drives D 31.1
SINAMICS Converters for Single-Axis Drives
Built-In Units

PDF (E86060-K5531-A111-A5-7600)

Motion Control Drives D 31.2
SINAMICS Converters for Single-Axis Drives
Distributed Converters

PDF (E86060-K5531-A121-A4-7600)

Motion Control Drives D 31.5
SINAMICS Converters for Single-Axis Drives
SINAMICS G120X infrastructure converters
for HVAC/Water/Wastewater

PDF (E86060-K5531-A151-A5-7600)

Motion Control Drives D 32
SINAMICS S210 Servo Drive System

PDF (E86060-K5532-A101-B1-7600)

Motion Control Drives D 36.1
SINAMICS Converters for Single-Axis Drives
SINAMICS G220 built-in and wall-mounted units

PDF (E86060-K5536-A111-A5-7600)

SINAMICS S120 D 21.3
Chassis Format Converter Units
Chassis-2 Format Converter Units
Cabinet Modules, Cabinet Modules-2
SINAMICS S150
Converter Cabinet Units
PDF (E86060-K5521-A131-A9-7600)

Motion Control Drives D 21.4
SINAMICS S120, SINAMICS S220 and
SIMOTICS

PDF (E86060-K5521-A141-A2-7600)

Motion Control Drives D 23.1
SINAMICS DCM
series of converters
DC Converter, Control Module

PDF (E86060-K5523-A111-A4-7600)

SIMOTICS S-1FG1 D 41
Servo geared motors
Helical, Parallel shaft, Bevel and
Helical worm geared motors

PDF (E86060-K5541-A101-A6-7600)

Motion Control Drives D 60
SIMOTICS E
Drive system for extra low voltage

PDF (E86060-K5560-A101-A2-7600)

Motion Control System PM 21
SIMOTION
Equipment for Production Machines

PDF (E86060-K4921-A101-A4-7600)

Industrial Controls IC 10
SIRIUS

PDF (E86060-K1010-A101-B7-7600)

Low-Voltage Power Distribution and Electrical Installation Technology LV 10
SENTRON • SIVACON • ALPHA

PDF (E86060-K8280-A101-B9-7600)

SIMATIC ST 70
Products for
Totally Integrated Automation

PDF (E86060-K4670-A101-C1-7600)

SIMATIC HMI /
PC-based Automation ST 80/ST PC
Human Machine Interface Systems
PC-based Automation

PDF (E86060-K4680-A101-D3-7600)

SITRAIN
Digital Industry Academy

www.siemens.com/sitrain

SiePortal
Information and Ordering Platform
on the Internet

sieportal.siemens.com

© Siemens 2025

SIEMENS

Combining the real and digital worlds ...
Transformation

Catalog
D 37.1

Edition
November
2025

MOTION CONTROL DRIVES

SINAMICS S200
Servo drive system

siemens.com/d37-1

Dear Customer,

We are pleased to present you with the new edition of the Catalog D 37.1 · November 2025.

The catalog provides a comprehensive overview of the SINAMICS S200 servo drive system consisting of a SINAMICS S200 servo converter, a SIMOTICS S-1FL2 servomotor and a matching MOTION-CONNECT connection system.
In addition to updates and technical adjustments, the new edition of the catalog has mainly been expanded to include SIMOTICS S-1FL2 servomotors with shaft height 40 Compact.

The products listed in this catalog are also included in SiePortal.
Please contact your local Siemens office for additional information.

Up-to-date information about SINAMICS S200 is available online at
www.siemens.com/sinamics-s200

You can access SiePortal online at
https://sieportal.siemens.com

Your personal contact is keen to receive your suggestions and recommendations for improvement. You can find your contact in our contact database at
www.siemens.com/automation-contact

We hope that you will often enjoy using Catalog D 37.1 · November 2025 as a selection and ordering reference document and wish you every success with our products and solutions.

With kind regards,

Frank Golüke
Vice President
General Motion Control
Siemens AG, Digital Industries, Motion Control

© Siemens 2025

© Siemens 2025

SINAMICS S200 Servo drive system

Motion Control Drives

Catalog D 37.1 · November 2025

Supersedes:
Catalog D 37.1 · November 2023

Refer to SiePortal for current updates of this catalog:
https://sieportal.siemens.com

Please contact your local Siemens branch.

© Siemens 2025

System overview 1

SINAMICS S200 servo converters 2

SIMOTICS S-1FL2 servomotors 3

MOTION-CONNECT connection systems 4

Engineering tools 5

Services and documentation 6

Appendix 7

Click on an Article No. in the catalog PDF to call it up in SiePortal and to obtain all the information.

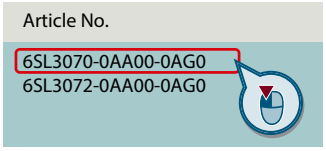

Or directly on the internet, e.g.
www.siemens.com/product_catalog_DIMC?6SL3070-0AA00-0AG0

The products and systems described in this catalog are manufactured/distributed under application of a certified quality management system in accordance with EN ISO 9001.
The certificate is recognized by all IQNet countries.

© Siemens 2025

Motion beyond expectations

Drives move the industries. But how can they make them more efficient, more reliable and more sustainable – and exceed all expectations while they are doing it? Our answer: Siemens Xcelerator for Digital Drivetrain.

Digital solutions for Drivetrain Design and Drivetrain Health

Combine the real and the digital world to reach the next level of efficiency and sustainability in your drivetrain value chain: with suitable digital solutions for drivetrain design and drivetrain health.
Drivetrain Design:
Simplify and shorten the engineering steps to get faster and more efficiently from concept to the commissioned drivetrain.
Drivetrain Health:
Reduce total cost of ownership for your equipment and machine park – energy, maintenance, downtime.

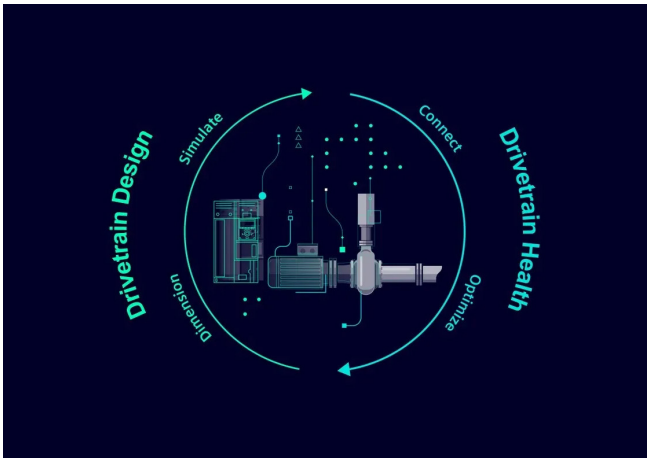

siemens.com/digital-drivetrain

© Siemens 2025

Digitalization along the drivetrain value chain

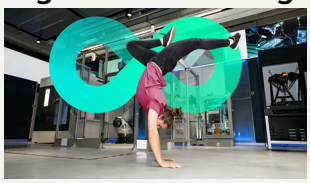

Dimension

Accurate in motion: Dimension your motors, gearboxes, and complete drivetrains digitally with greater precision – for greater reliability and energy efficiency.

Simulate

Faster in motion: Add the digital twin of the drivetrain to your machine simulation to speed up your design and engineering phases and to accelerate your time-to-market!

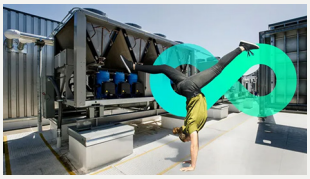

Connect

Data in motion: Acquire high-quality raw data and connect your entire drive-trains or machines to cloud or on-premise platforms – for a consistent and secure data flow.

Optimize

Better in motion: Analyze and visualize drivetrain and machine data in digital solutions and apps to identify optimization potentials and concrete actionable measures how to tap it.

Use cases for digital drivetrain technology

Condition monitoring for drivetrains

Healthy in motion: Gain valuable insights into your drivetrain to optimize maintenance, system availability, cost efficiency, and sustainability: Discover intelligent digital condition monitoring for your drivetrains!

Are your drivetrains fit enough for tough times?

The industries are expected to produce ever more efficiently, ever more sustainably and ever more cost-effectively. And if you can't do that, it's easier to be left behind by the competition. Use digitalization and the data from your motors and converters to optimize your competitiveness – and to keep your production in motion.

What if you consume too much electricity?

With digital solutions and digital drive technology, you can significantly reduce your share of this!

What if you waste too much energy?

Digitalization enables you to detect energy waste and impending system down-times at an early stage so that you can take counter-measures in due time!

What if your motors are incorrectly designed?

Digital tools make it quicker and easier to correctly design your drive components!

What if your drives fail unexpectedly?

With digital solutions, you can identify risks in your drivetrain at an early stage and react before a failure occurs.

"Our digital solutions transform your drivetrain value chain to the next level of efficiency and sustainability."

siemens.com/digital-drivetrain

© Siemens 2025

SINAMICS frequency converters

SINAMICS variable frequency drives – the ultimate solution for all drive applications. From low voltage to direct current (DC), our drives meet your needs. With increased efficiency and versatility, take your applications to the next generation for a digital and sustainable future.

Driving next generation applications

When it comes to driving industry advancements, look no further than our SINAMICS frequency converters. They fuel the creation of innovative, next-generation applications that meet the unique needs of every industry.

From pumping and ventilating to moving, positioning, processing, and machining, our converters have you covered. Get ready to take your applications to new heights.

siemens.com/sinamics

© Siemens 2025

Low voltage converters

Low voltage frequency converters are suitable for a huge range of applications. For example, if materials must be moved, processed, positioned, pumped or compressed. Variable-speed operation saves energy and also increases process quality and process availability.

Servo converters

These servo converters meet the highest dynamic requirements for single and multi-axis applications. The perfect solution for machine tools, packaging machines, continuous material handling, cranes, rolling mills, test stands, material handling, robotics and many other applications requiring high-precision, dynamic motion control.

DC converters

The dynamic performance, ruggedness, and cost-effectiveness of DC technology continue to make it the most cost-effective and proven drive solution for many applications today – with numerous advantages in terms of reliability, ease of use, and operational performance.

Accelerating the digital and sustainable transformation of industry

How can you make production more efficient? Accelerate your digital transformation? And become more sustainable?

The answer is our SINAMICS frequency converters. They are energy efficient, offer the versatility you need for any application, and drive your digital transformation by providing the data to continuously improve production efficiency and sustainability. Our converters offer you integrated safety and security features, efficient engineering and software tools as well as comprehensive lifecycle services. In other words: Everything you need to address the next generation of applications – today and tomorrow.

EFFICIENT

Implement energy-efficient applications easily, quickly, and safely with efficient motion control.

- Sustainable drive systems
- Efficient Motion Control solutions
- Drive System Services

VERSATILE

Drives equipped with tailored safety features to ensure optimal machine safety in a wide range of industrial applications.

- Safety and Security Integrated
- Drive applications
- Drives for any industry

FUTURE-PROOF

Efficient engineering, powerful software tools, and cloud and edge connectivity for greater transparency.

- Digitalization in drive technology
- Efficient drive engineering
- Drive Software for all applications

siemens.com/sinamics

© Siemens 2025

Totally Integrated Automation

Totally Integrated Automation (TIA) offers smart automation development, flexible machine concepts, transparent operation, and sustainable solutions that enable access to data to calculate and optimize the product carbon footprint. We are constantly improving and expanding TIA to be future-proof and adaptive to existing and upcoming challenges.

A comprehensive portfolio for the challenges of today and tomorrow

The TIA offering is integrated seamlessly and it's so comprehensive that it provides the right automation solutions for every industry. We will continue to improve and expand our proven automation portfolio and are constantly including innovative technologies and solutions that pave the way towards the factory of the future.

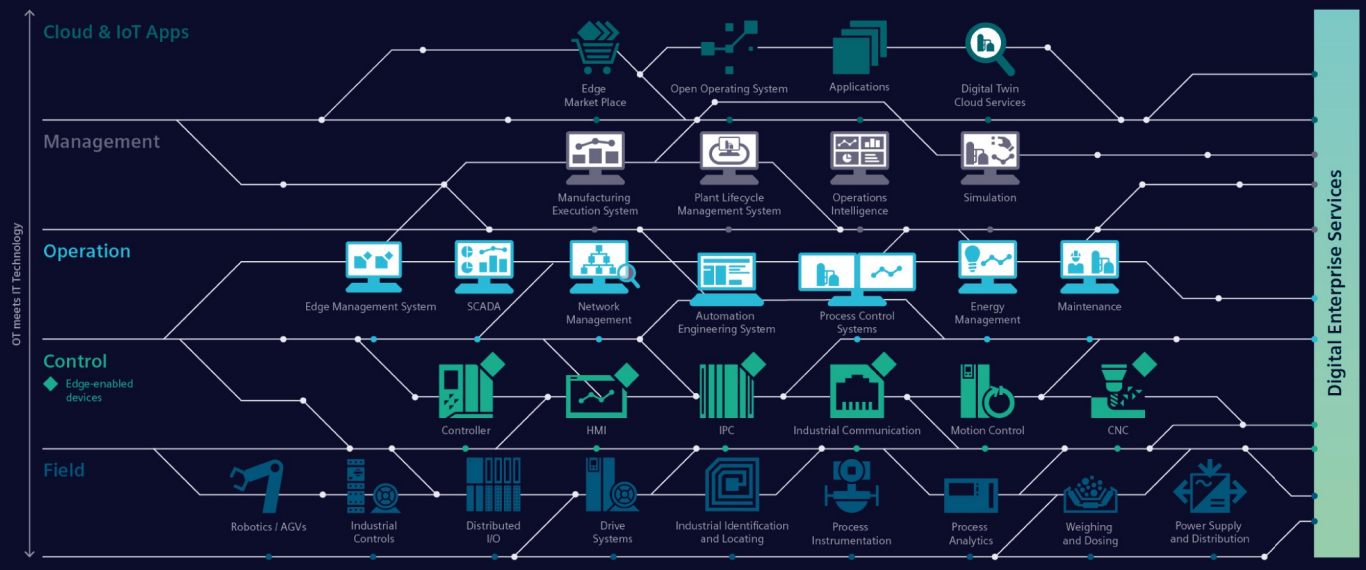

© Siemens 2025

Real added value for the automation of your production

From the development of innovative machine concepts to engineering and optimized production:
TIA offers real added value along the entire value chain.

Smart Automation Development

Innovative machine concepts made easy: When you use standardized library concepts and preconfigured expertise, you can count on efficient engineering. Thanks to the integration of safety features, diagnostic functions, and cybersecurity, you also save valuable time.

Flexible Machine Concepts

No matter what new requirements emerge in the market, TIA supports modular machine concepts and the simple integration of new machines into existing lines – thanks to standardized hardware interfaces and engineering libraries. As a machine builder, this enables you to meet any challenge quickly and reliably.

Transparent Operation

Integrated interfaces let you achieve a new level of transparency for the essential performance indicators in your processes and plants. The connection between IT and OT along with efficient data management lay the foundation for new service models such as predictive maintenance.

Future-proof Automation

Our TIA portfolio is constantly being refined with a view to integrating automation technologies more and more efficiently. The components can then interact with modern IT capabilities, which are becoming increasingly important for specific applications in automation. TIA provides a solid foundation, whether for working with our Industrial Operations X portfolio or for everything the future has in store.

Sustainable Solutions

Sustainability starts with the acquisition of data. With the TIA portfolio, you can measure energy and resource data and make it transparent, providing a solid foundation for calculating the Product Carbon Footprint. This is crucial for drawing the right conclusions and responding to sudden changes in order to lastingly reduce CO_2 emissions and save more resources in production.

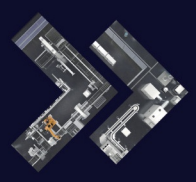

www.siemens.com/tia

TIA Selection Tool – quick, easy, smart configuration

For you to get the most out of our portfolio quickly and easily.

Do you always need the optimum configuration for planning your project?
For your application we offer the TIA Selection Tool to support all project planners, beginners and experts alike.
No detailed portfolio knowledge is necessary.
TIA Selection Tool is available for download as a free desktop version or a cloud variant.

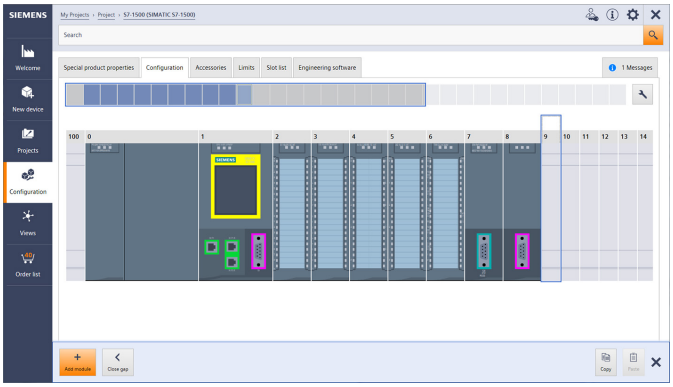

Your Advantages

Quick

- Configure a complete project with just a few entries – without a manual, without special knowledge
- Import and export of hardware configuration to TIA Portal or other systems
- Ideal visualization of the projects to be configured

Easy

- Tool download either as desktop version or web-based cloud version
- Technically always up-to-date about product portfolio and innovative approaches
- Highly flexible, secure, cross-team work in the cloud
- Direct ordering in SiePortal

Smart

- Smart selection wizard for error-free configuration and ordering
- Configuration options can be tested and simulated in advance
- Library for archiving sample configurations

The TIA Selection Tool is a completely paperless solution.
Download it now:
www.siemens.com/tst

For more information, scan the QR code

© Siemens 2025

Sustainability @Siemens

Transforming the everyday to create a better tomorrow.

For more information, see www.siemens.com/sustainability figures

As a company, Siemens considers environmental, social and governance (ESG) criteria from all angles with its DEGREE framework (decarbonization, ethics, governance, resource efficiency, equity and employability). We are not only committed to reducing the carbon footprint in our own operations to net zero by 2030, but also helping our customers achieve their decarbonization and sustainability goals.

Mission & strategy

As a focused technology company, Siemens is committed to addressing the world's most profound challenges by leveraging the synergies between digitalization and sustainability.

Technology with aim and purpose

We develop technologies that connect the real and digital worlds and enable our customers to positively transform the industries that form the backbone of our economy: industry, infrastructure, transportation and healthcare.

Our contribution

Siemens makes an impact every day by providing innovative solutions in response to challenges relating to environmental protection, decarbonization, health and safety. Innovative solutions that have a clear goal: to make the world more sustainable, more integrative and a better place to live.

Sustainability facts

For almost 175 years, Siemens has been driven by the desire to improve the lives of people around the world with our technologies.

Siemens EcoTech

Siemens EcoTech is an environmental product performance label designed to drive the sustainable transformation of industry and infrastructure. The label gives you transparency on the performance of our certified products across environmental relevant criteria, enabling you to make informed choices to support your sustainability goals, see www.siemens.com/SiemensEcoTech.

© Siemens 2025

© Siemens 2025

System overview

1/2 The SINAMICS converter family
1/2 Overview

1/3 Drive selection
1/3 Overview
1/3 More information

1/4 SINAMICS S200 servo drive system
1/4 Overview
1/5 Benefits
1/6 Application
1/7 Design
1/11 Integration
1/13 Configuration
1/15 Technical specifications
1/16 Selection and ordering data
1/16 **SINAMICS S200 servo drive system with SIMOTICS S-1FL2**
1/16 **- Low Inertia servomotors**
1/22 **- Medium Inertia servomotors**
1/28 **- High Inertia servomotors**
1/34 Accessories
1/35 More information

1/35 SINAMICS S200 starter kit
1/35 Selection and ordering data

1/36 Recommended SIMATIC S7 controller
1/36 Selection and ordering data

© Siemens 2025

Overview

SINAMICS frequency converters

SINAMICS frequency converters are the ultimate solution for all drive applications. From low voltage to medium voltage to direct current (DC), our frequency converters meet your needs.

With increased efficiency and versatility, take your drive applications to the next generation for a digital and sustainable future. www.siemens.com/sinamics

Low voltage											Direct voltage
Standard performance frequency converters		Distributed frequency converters	Industry-specific frequency converters		Servo converters			High performance frequency converters			DC converters
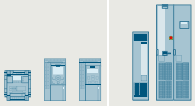											
SINAMICS V20 G120C G120	SINAMICS G130 G150	SINAMICS G115D G120D SIMATIC ET 200pro FC-2	SINAMICS G120X	SINAMICS G180	SINAMICS V90 S200	SINAMICS S110	SINAMICS S210 (6SL5...)	SINAMICS G220	SINAMICS S120 S120M	SINAMICS S150	SINAMICS DCM DCP [1]
0.12 kW to 250 kW	75 kW to 2700 kW	0.37 kW to 7.5 kW	0.75 kW to 630 kW	2.2 kW to 6600 kW	0.05 kW to 7 kW	0.55 kW to 132 kW	0.05 kW to 7 kW	0.55 kW to 110 kW	0.55 kW to 5700 kW	75 kW to 1200 kW	6 kW to 30 MW
Pumps, fans, compressors, conveyor belts, mixers, mills, spinning machines, textile machines, refrigerated display counters, fitness equipment, ventilation systems, single-axis positioning applications in machine and plant engineering	Pumps, fans, compressors, conveyor belts, mixers, mills, extruders	Conveyor technology, single-axis positioning applications (G120D)	Pumps, fans, compressors, building management systems, process industry, HVAC, water/waste water industries	Pumps, fans, compressors, conveyor belts, extruders, mixers, mills, kneaders, centrifuges, separators	Handling machines, packaging machines, automatic assembly machines, metal forming machines, printing machines, winding and unwinding units	Single-axis positioning applications in machine and plant engineering	Packaging machines, handling equipment, feed and withdrawal devices, stacking units, automatic assembly machines, laboratory automation, wood, glass and ceramics industry, digital printing machines	Pumps, fans, compressors, conveyor belts, mixers, mills, spinning machines, textile machines, refrigerated display counters, fitness equipment, ventilation systems, single-axis positioning applications in machine and plant engineering	Production machines (packaging, textile and printing machines, paper machines, plastic processing machines), machine tools, plants, process lines and rolling mills, marine drives, test bays	Test bays, cross cutters, centrifuges	Rolling mill drives, wire-drawing machines, extruders and kneaders, cableways and lifts, test bay drives
Catalog D 31.1	Catalog D 11	Catalog D 31.2	Catalog D 31.5	Catalog D 18.1	Catalog D 33 D 37.1	Catalog D 31.1	Catalog D 32	Catalog D 36.1	Catalogs D 21.3, D 21.4 NC 62	Catalog D 21.3	Catalog D 23.1, SiePortal
Engineering tools (e.g. Siemens Product Configurator, TIA Selection Tool, DriveSim Designer/Engineer, STARTER and SINAMICS Startdrive)											

[1] DC/DC controllers, see SiePortal.

G_D011_EN_00450x

© Siemens 2025

Overview

SINAMICS selection guide – typical applications

Use	Requirements for torque accuracy/speed accuracy/position accuracy/coordination of axes/functionality					
	Continuous motion			Non-continuous motion		
	Basic	Medium	High	Basic	Medium	High
	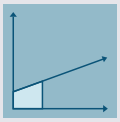	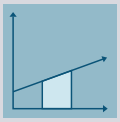	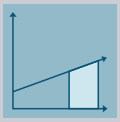	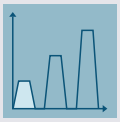	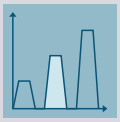	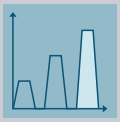
Pumping, ventilating, compressing	Centrifugal pumps Radial / axial fans Compressors	Centrifugal pumps Radial / axial fans Compressors	Eccentric screw pumps	Hydraulic pumps Metering pumps	Hydraulic pumps Metering pumps	Descaling pumps Hydraulic pumps
	V20 G120C G120X	G120X G130/G150 G180 [1] DCM	G220 S120	G120/G220	S110	S120
Moving 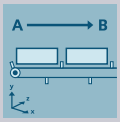	Conveyor belts Roller conveyors Chain conveyors	Conveyor belts Roller conveyors Chain conveyors Lifting/lowering devices Elevators Escalators/moving walkways Indoor cranes Marine drives Cable railways	Elevators Container cranes Mining hoists Excavators for open-cast mining Test bays	Acceleration conveyors Storage and retrieval machines	Acceleration conveyors Storage and retrieval machines Cross cutters Reel changers	Storage and retrieval machines Robotics Pick & place Rotary indexing tables Cross cutters Roll feeds Engagers/ disengagers
	V20 G115D G120C ET 200pro FC-2 [2]	G120/G220 G120D G130/G150 G180 [1]	G220 S120 S150 DCM	V90 **S200** G120/G220 G120D	S110 S210 DCM	S120 S210 DCM
Processing 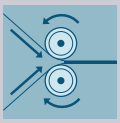	Mills Mixers Kneaders Crushers Agitators Centrifuges	Mills Mixers Kneaders Crushers Agitators Centrifuges Extruders Rotary furnaces	Extruders Winders/unwinders Lead/follower drives Calenders Main press drives Printing machines	Tubular bagging machines Single-axis motion control such as • Position profiles • Path profiles	Tubular bagging machines Single-axis motion control such as • Position profiles • Path profiles	Servo presses Rolling mill drives Multi-axis motion control such as • Multi-axis positioning • Cams • Interpolations
	V20 G120C	G120 G130/G150 G180 [1]	G220 S120 S150 DCM	V90 **S200** G120/G220	S110 S210	S120 S210 DCM
Machining	Main drives for • Turning • Milling • Drilling	Main drives for • Drilling • Sawing	Main drives for • Turning • Milling • Drilling • Gear cutting • Grinding	Axis drives for • Turning • Milling • Drilling	Axis drives for • Drilling • Sawing	Axis drives for • Turning • Milling • Drilling • Lasering • Gear cutting • Grinding • Nibbling and punching
	S110	S110 S120	S120	S110	S110 S120	S120

Using the SINAMICS selection guide

The varying range of demands on modern variable frequency drives requires a large number of different types. Selecting the optimum drive has become a significantly more complex process. The application matrix shown simplifies this selection process considerably, by suggesting the ideal SINAMICS drive for examples of typical applications and requirements.

- The application type is selected from the vertical column
  - Pumping, ventilating, compressing
  - Moving
  - Processing
  - Machining
- The quality of the motion type is selected from the horizontal row
  - Basic
  - Medium
  - High

More information

Further information about SINAMICS is available on the internet at www.siemens.com/sinamics

Practical application examples and descriptions are available on the internet at www.siemens.com/sinamics-applications

[1] Industry-specific converters.

[2] Information on the SIMATIC ET 200pro FC-2 frequency converter is available in Catalog D 31.2 and at www.siemens.com/et200pro-fc

© Siemens 2025

Overview

SINAMICS S200 servo drive system

Example: SINAMICS S200 servo drive system consisting of a SINAMICS S200 servo converter, 200 ... 240 V 1 AC / 3 AC, PROFINET, frame size FSB, a SIMOTICS S-1FL2 servomotor, shaft height 30, metal hybrid connector, outlet direction drive end (DE) and MOTION-CONNECT 350 dual cables for power and communication

The SINAMICS S200 servo drive system is a single axis AC/AC servo drive system with compact design, high dynamic performance, ease of use and high reliability for motion control applications in standard servo motion market. It comprises SINAMICS S200 servo converters, SIMOTICS S-1FL2 servomotors, MOTION-CONNECT 350 and 380 connection systems and engineering tools.

System components

SINAMICS S200 servo converters

The SINAMICS S200 servo converters consist of a basic version and a standard version with pulse train input position control (PTI) or PROFINET RT/IRT (PN) to meet various needs of applications and work perfectly together with SIMATIC controllers. With the SINAMICS S200, the PROFINET function "Dynamic Frame Packing" (DFP) is available, which enables the connection of large numbers of axes to a SIMATIC controller.

- SINAMICS S200 Basic servo converters, power range 0.1 to 1 kW at 200 ... 240 V 1 AC / 3 AC
- SINAMICS S200 servo converters, power range 0.1 to 1 kW at 200 ... 240 V 1 AC / 3 AC and 0.2 to 7 kW at 380 ... 480 V 3 AC

SIMOTICS S-1FL2 servomotors

With flexible encoder options, including absolute encoders 17-bit singleturn, 21-bit singleturn and 21-bit singleturn + 12-bit multiturn, the system provides precise and accurate performance. The encoders can be used without a battery, making it easy to operate and maintenance.

- Low Inertia for high dynamic performance
- Medium Inertia for dynamic and smooth operational performance
- High Inertia for smooth operational performance

MOTION-CONNECT 350 and 380 connection systems

The cables are available in lengths of up to 30 m and one step further optimized in easy and secure installation with "one-push-lock" motor connecting solution for motor shaft heights 20, 30 and 40.

- MOTION-CONNECT 350 cables, which provide a connection solution for fixed installation applications
- MOTION-CONNECT 380 cables, which provide a connection solution for drag chain installation applications that require a high number of bending cycles

SINAMICS Drive Software highlights from firmware V6.4

- OPC UA server with information model for inventory management and process data acquisition (from firmware V6.4 HF2)
- Security:
  - Security event log for sending security events via syslog protocol to a server
  - Additional UMAC privileges for security configuration
  - Integrity protection for backups
  - Extended handling of certificates
- Integrated Positioning
  - Higher resolution through 64-bit data type for position values together with new telegram 113
  - Load gearbox position tracking support for reproducibility of the load position when using gears
- Vibration suppression support for the reduction of vibrations in the natural frequency range up to 10 Hz
- Configurable supplementary telegram for handover additional data to the PLC

© Siemens 2025

Benefits

Performance-optimized

Dynamic

Ideal for dynamic applications thanks to:

- fast current controllers
- 8 kHz PWM frequency

Fast

The system enables seamless communication to controllers via PROFINET IRT, providing fast and efficient data exchange and control.

Overload capacity

SIMOTICS S-1FL2 servomotors providing up to 350 % overload capacity, can handle sudden increases in load without compromising performance or efficiency, ensuring uninterrupted operation and increased productivity.

Compact

To enable more efficient use of cabinet space and improve application system design, both servo converters and servomotors are further optimized in compactness thanks to their high power density. More important, for side-by-side installation, SINAMICS S200 servo converters require only 1 mm for 200 V series and 10 mm for 400 V series.

Easy to use

Easy setup

All frame sizes of SINAMICS S200 servo converters have an integrated holding brake control [1], which does not require connection to an external relay, and the integrated brake resistor to dissipate the regenerative power for fast braking, which is easy and cost effective for applications.

Easy engineering.

With directly integrated into SINAMICS Startdrive, and the embedded SINAMICS web server for SINAMICS S200, variety of user-friendly features make the servo drive system easy for engineering. Additionally, advanced One Button Tuning (OBT) enables machines to achieve a high dynamic performance within just seconds.

Easy implementation

The system is designed to meet global standards and certifications, including CE, UKCA, UL, RCM, EAC, KC and SEMI F47, ensuring compliance with safety and quality regulations worldwide.

Fit for future

Digital engineering journey

Unlock potential with a seamless digital engineering journey, from selection and commissioning to diagnosis via TIA Selection Tool, Siemens Product Configurator and TIA Portal. More important, SINAMICS S200 servo drive system can be simulated with DriveSim Designer.

Scalable system

As a scalable system, users can get a seamless integrated motion control system together with SIMATIC controllers (e.g. SIMATIC S7-1500).

Safety & Security

The system includes a safety concept that features Safety Integrated Basic Function Safe Torque Off (STO), ensuring safe and reliable operation. You achieve defense in depth thanks to User Management and Access Control (UMAC) providing always active industrial security service.

Siemens EcoTech Profile (SEP) for SINAMICS S200

Siemens introduces a new label: Siemens EcoTech. It is an environmental declaration for products based on product-specific evaluations of sustainability relevant KPIs.

To provide maximum transparency, the Siemens EcoTech Profile (SEP) were created for all Siemens EcoTech products.

It is a Siemens-created, standardized product data sheet which gives insight about the product performance in environmental relevant criteria as well as about interpretation and comparison of data against an existing norm, standard or predecessor product.

You can find more information on the internet at:
https://support.industry.siemens.com/cs/ww/en/ps/29596/cert?ci=5702

www.siemens.com/SiemensEcoTech

Siemens EcoTech

Extended warranty

For SINAMICS S200 servo drive system, Siemens offers an optional extended warranty of up to 5½ years via **Service Protect**:

- Free for the first 6 months after registering the product at: www.siemens.com/serviceprotect
- Subject to a charge for a further 3 or 5 years of extended warranty for SINAMICS S200 servo converters.
- Subject to a charge for a further 1 or 2 years of extended warranty for SIMOTICS S-1FL2 servo motors.

You can find detailed information here:
https://support.industry.siemens.com/cs/ww/en/sc/4842

You can find the correct Service Protect product number for your SINAMICS S200 servo drive system using our simple configurator
www.siemens.com/serviceprotect

Concerning standard warranty please ask your partner at Siemens.

Your partner can be found in our Personal Contacts Database at:
www.siemens.com/automation-contact

[1] Not available for SINAMICS S200 Basic servo converters.

© Siemens 2025

Application

Application examples

	SINAMICS S200 servo drive system **Low Inertia** **for high dynamic performance** **200 V ... 240 V 1 AC / 3 AC**	**Medium Inertia** **for dynamic and smooth operational performance** **200 V ... 240 V 1 AC / 3 AC or 380 V ... 480 V 3 AC**	**High Inertia** **for smooth operational performance** **380 V ... 480 V 3 AC**
Electronics	• LED sorting machine • Glass cover inspection machine • PCB-AOI detection machine • PCB laser cutting machine • Screwing machine • PCB feeding and blanking machine • Assembly production line	• Assembly production line	–
Battery	• Stacking machine • EL filling machine • Busbar welding machine • Case insertion machine • Detection machine	• Laser welding machine • Calendering and slitting machine • Die-cutting machine	• Coating machine • Calendering and slitting machine • Die-cutting machine
Solar	• Stringer machine • Plating diamond machine • Screen printing machine • Auto sorting machine	• Single crystal growing furnace • Batch texturing equipment • Squaring machine	–
Packaging	• Filling and sealing machine • Bag packing machine	• Pillow type packaging machine • Roller type blister packaging machine • Rigid box maker • Labelling machine	• Auto roll-fed square bottom paper bag machine • Rigid box maker
Handling and robotics	• 3- or 4-axis delta picker • 4-axis cylindrical robot • 5-axis roller picker • 4-axis tripod robot	• Cartesian portal	• Truss manipulator
Wood working	• Edging machine • Panel sawing machine	• Wooden engraving • Wooden machine center	• Wooden engraving • Wooden machine center
Metal forming	–	–	• Punching machine • Engraving machine • Edging press machine
Other general machinery	–	• Diaper production line • Stator winding machine • Winding embedding machine • Battery swap station	• Diaper production line • Stator winding machine • Copper foil green foil machine • Battery swap station

© Siemens 2025

Design

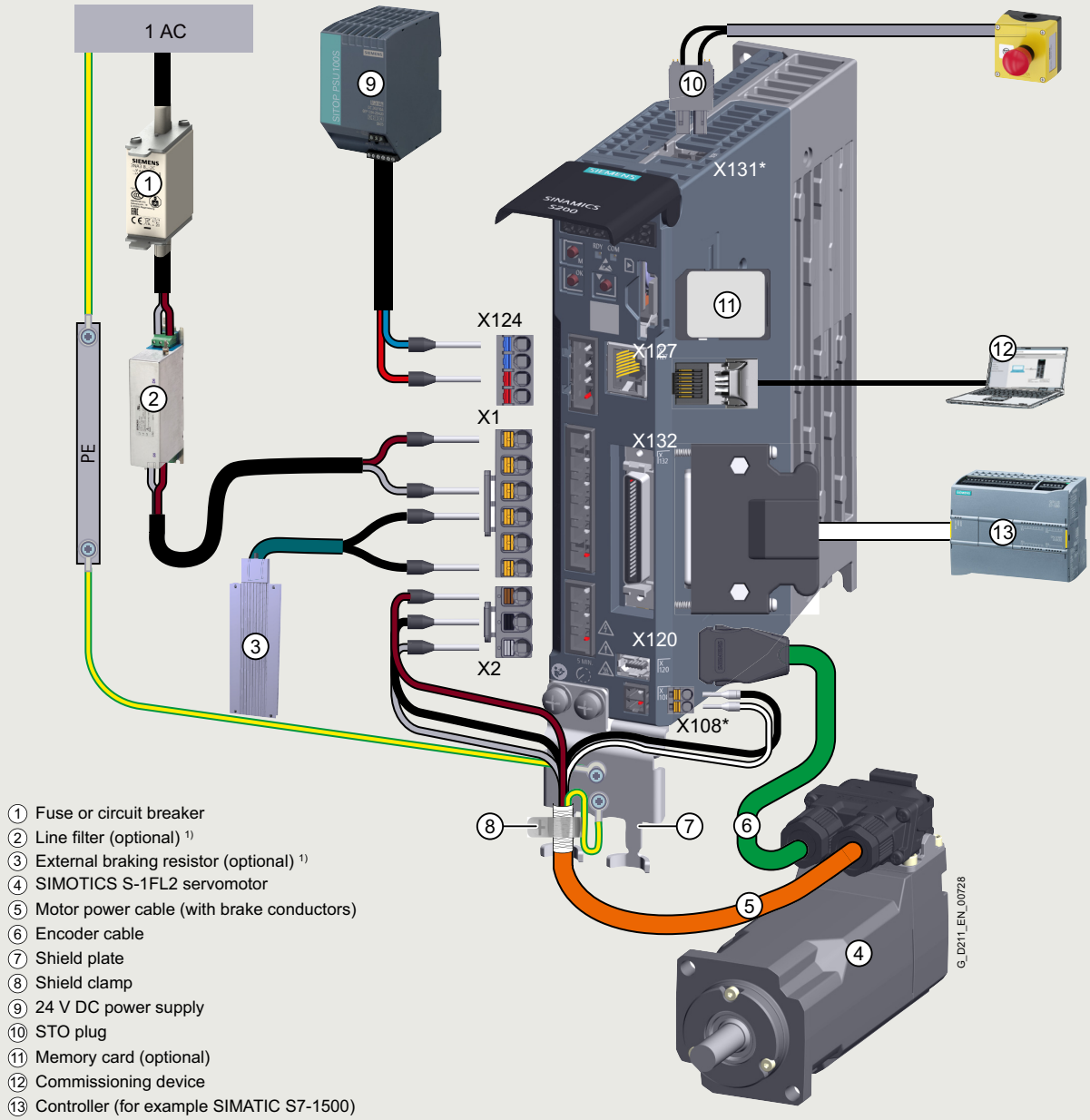

① Fuse or circuit breaker
② Line filter (optional) [1]
③ External braking resistor (optional) [1]
④ SIMOTICS S-1FL2 servomotor
⑤ Motor power cable (with brake conductors)
⑥ Encoder cable
⑦ Shield plate
⑧ Shield clamp
⑨ 24 V DC power supply
⑩ STO plug
⑪ Memory card (optional)
⑫ Commissioning device
⑬ Controller (for example SIMATIC S7-1500)

* The interfaces X131 and X108 are only available on the SINAMICS S200 converters, not on the SINAMICS S200 Basic converters.

[1] When using the components, make sure that they are connected to the ground correctly.

System connection overview SINAMICS S200 servo drive system, Pulse Train Input version (PTI), 1 AC

© Siemens 2025

Design

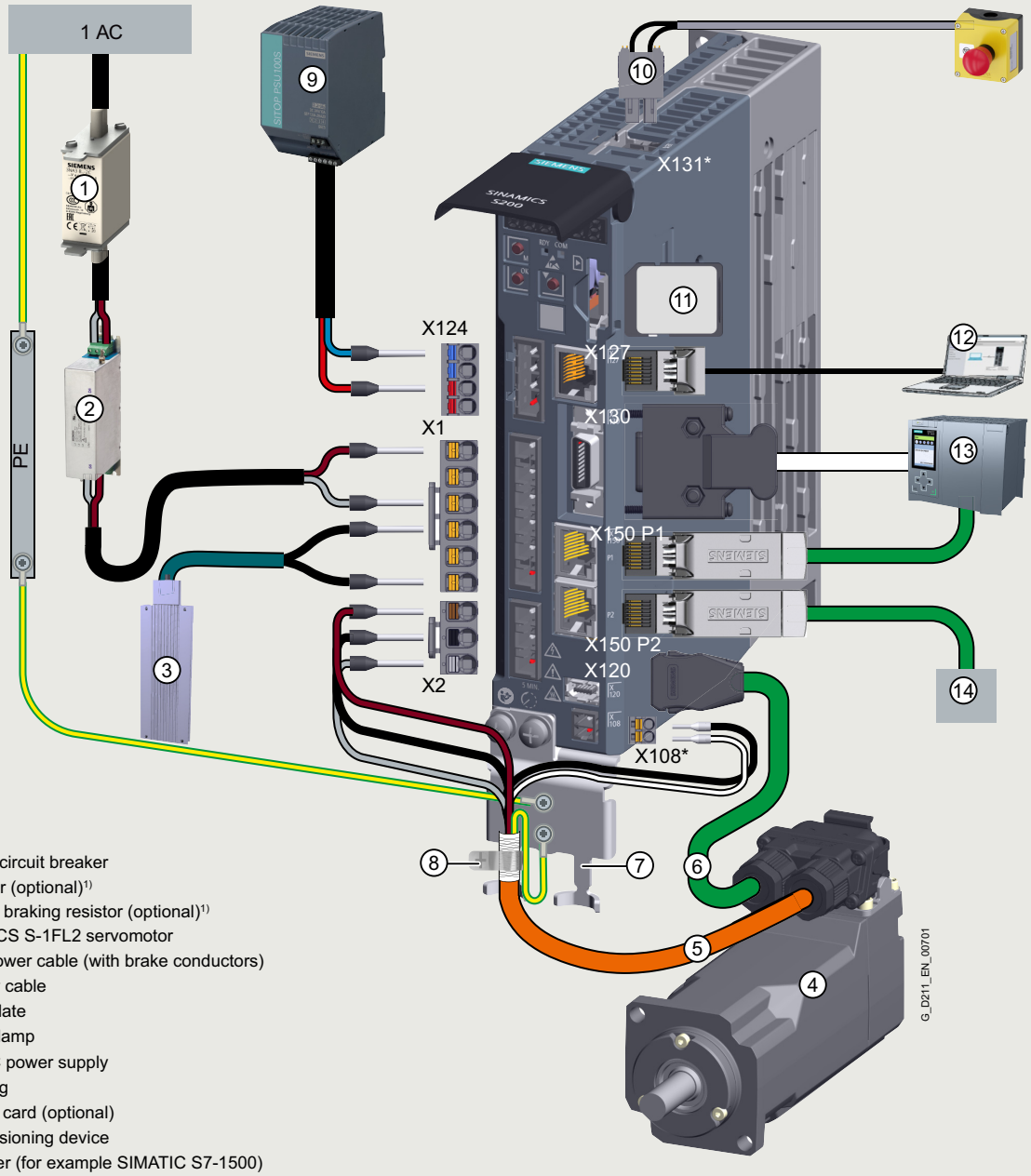

1. Fuse or circuit breaker
2. Line filter (optional)[1)]
3. External braking resistor (optional)[1)]
4. SIMOTICS S-1FL2 servomotor
5. Motor power cable (with brake conductors)
6. Encoder cable
7. Shield plate
8. Shield clamp
9. 24 V DC power supply
10. STO plug
11. Memory card (optional)
12. Commissioning device
13. Controller (for example SIMATIC S7-1500)
14. PROFINET connection for the next participant

* The interfaces X131 and X108 are only available on the SINAMICS S200 converters, not on the SINAMICS S200 Basic converters.

[1)] When using the components, make sure that they are connected to the ground correctly.

System connection overview SINAMICS S200 servo drive system, PROFINET version, 1 AC

© Siemens 2025

Design

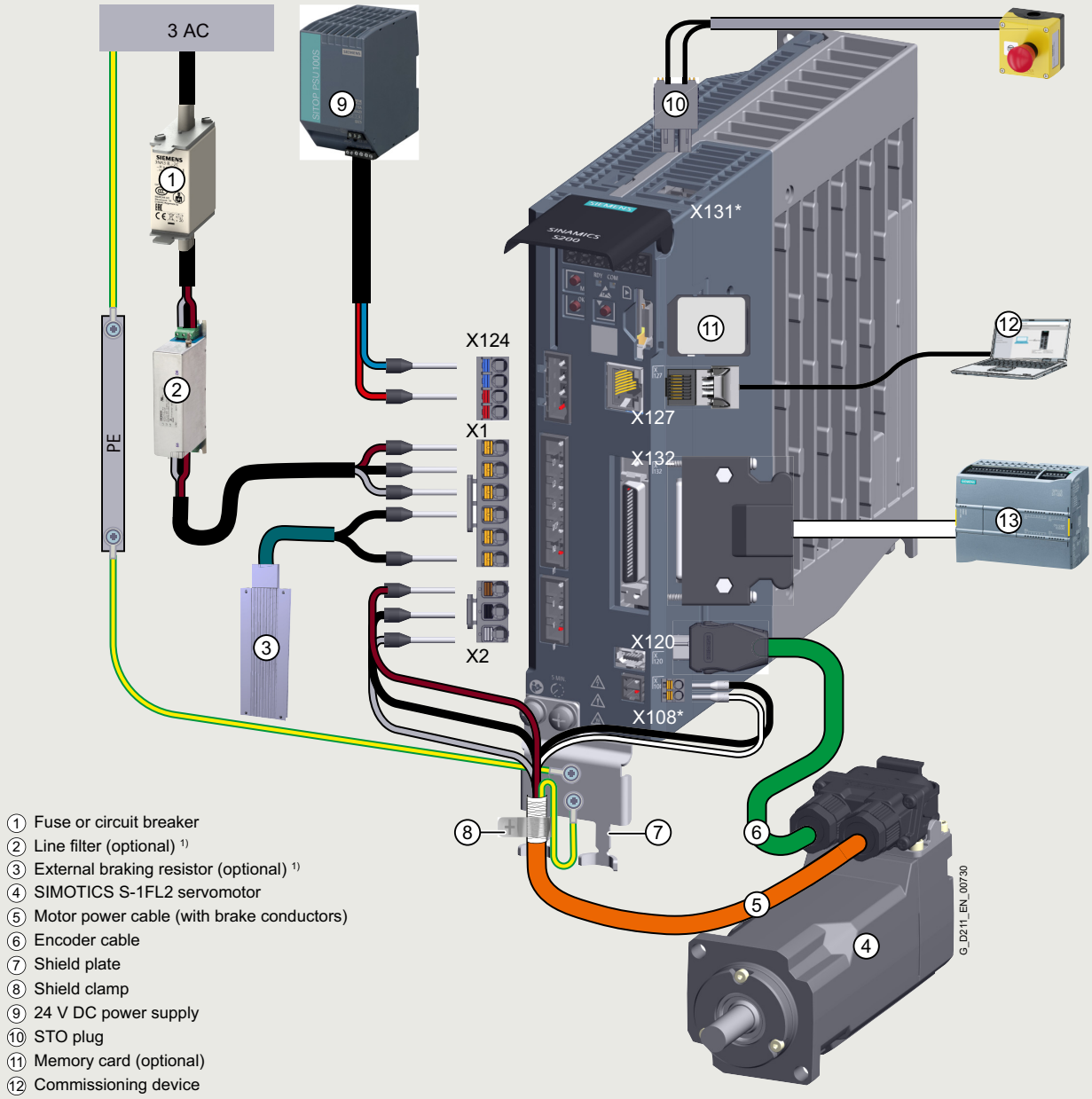

1. Fuse or circuit breaker
2. Line filter (optional) [1]
3. External braking resistor (optional) [1]
4. SIMOTICS S-1FL2 servomotor
5. Motor power cable (with brake conductors)
6. Encoder cable
7. Shield plate
8. Shield clamp
9. 24 V DC power supply
10. STO plug
11. Memory card (optional)
12. Commissioning device
13. Controller (for example SIMATIC S7-1500)

* The interfaces X131 and X108 are only available on the SINAMICS S200 converters, not on the SINAMICS S200 Basic converters.

[1] When using the components, make sure that they are connected to the ground correctly.

System connection overview SINAMICS S200 servo drive system, Pulse Train Input version (PTI), 3 AC

© Siemens 2025

Design

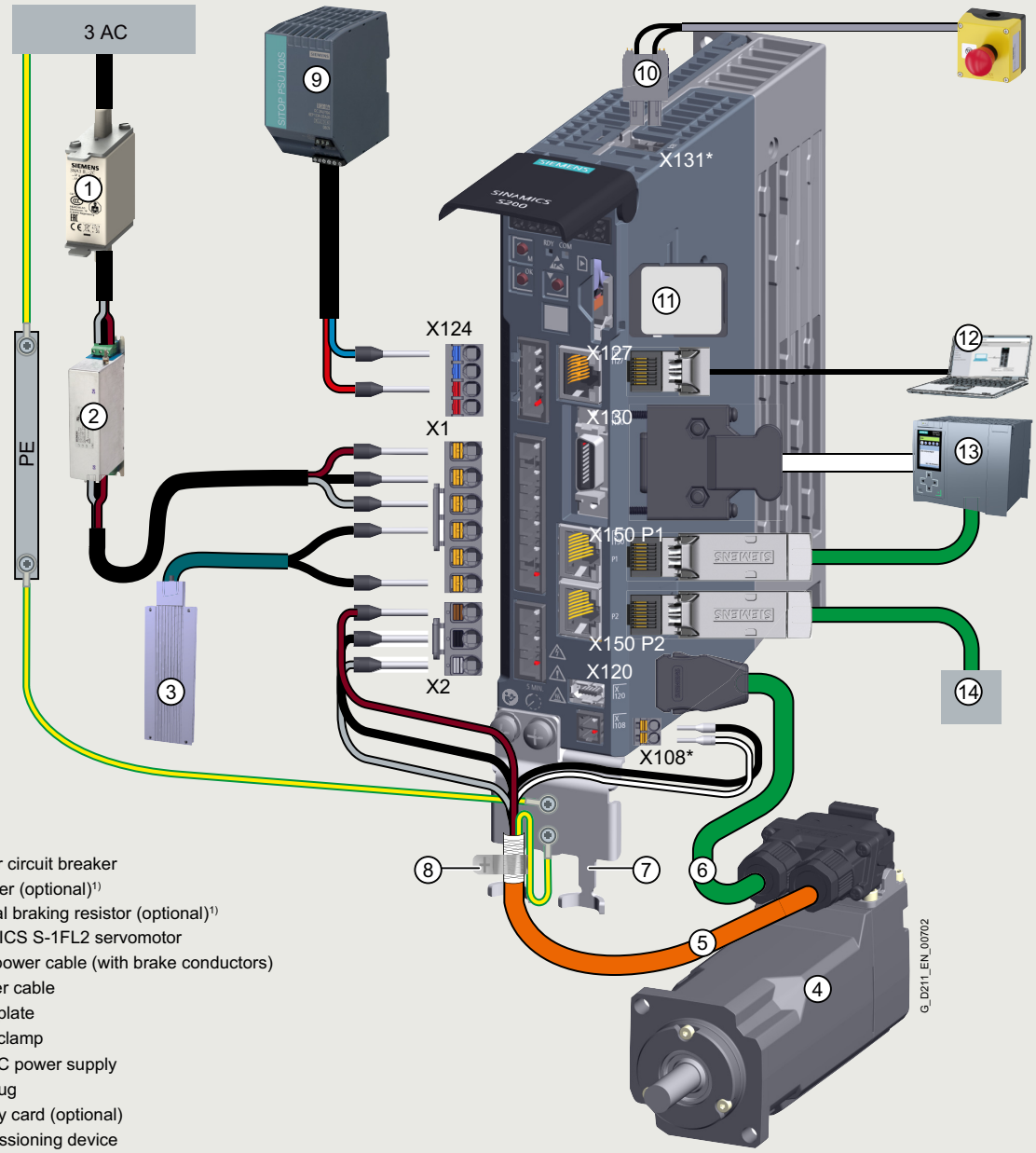

① Fuse or circuit breaker
② Line filter (optional)[1)]
③ External braking resistor (optional)[1)]
④ SIMOTICS S-1FL2 servomotor
⑤ Motor power cable (with brake conductors)
⑥ Encoder cable
⑦ Shield plate
⑧ Shield clamp
⑨ 24 V DC power supply
⑩ STO plug
⑪ Memory card (optional)
⑫ Commissioning device
⑬ Controller (for example SIMATIC S7-1500)
⑭ PROFINET connection for the next participant

* The interfaces X131 and X108 are only available on the SINAMICS S200 converters, not on the SINAMICS S200 Basic converters.

[1)] When using the components, make sure that they are connected to the ground correctly.

System connection overview SINAMICS S200 servo drive system, PROFINET version, 3 AC

© Siemens 2025

Integration

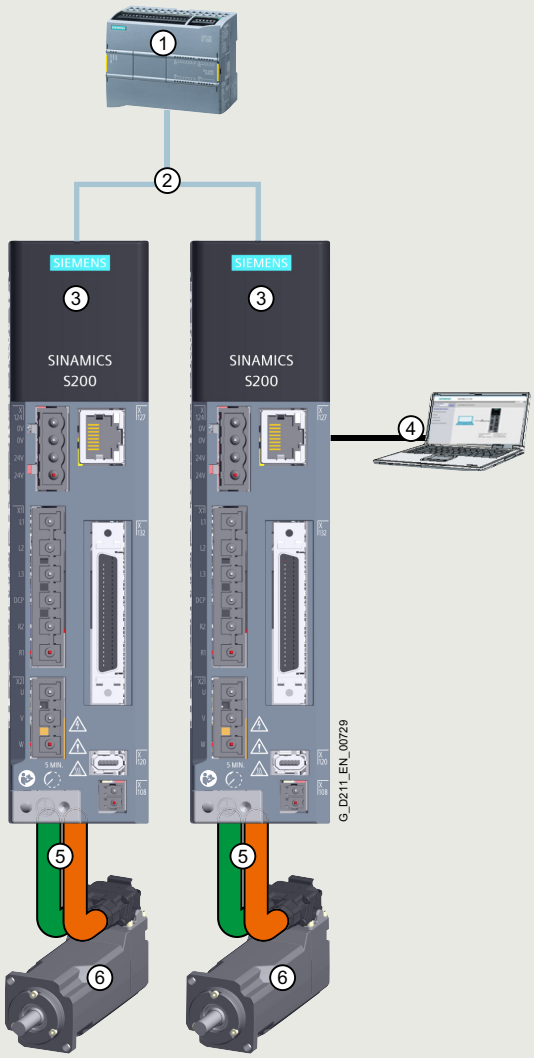

① Controller (for example SIMATIC S7-1500)

② Communication between the converter and the controller via setpoint cable

③ SINAMICS S200 converter product line (PTI version)

④ Engineering via LAN with the web server in the converter

⑤ MOTION-CONNECT 350 or MOTION-CONNECT 380 cables for connecting motor, motor holding brake and encoder

⑥ SIMOTICS S-1FL2 servomotor

System topology SINAMICS S200 servo drive system, Pulse Train Input version (PTI)

© Siemens 2025

Integration

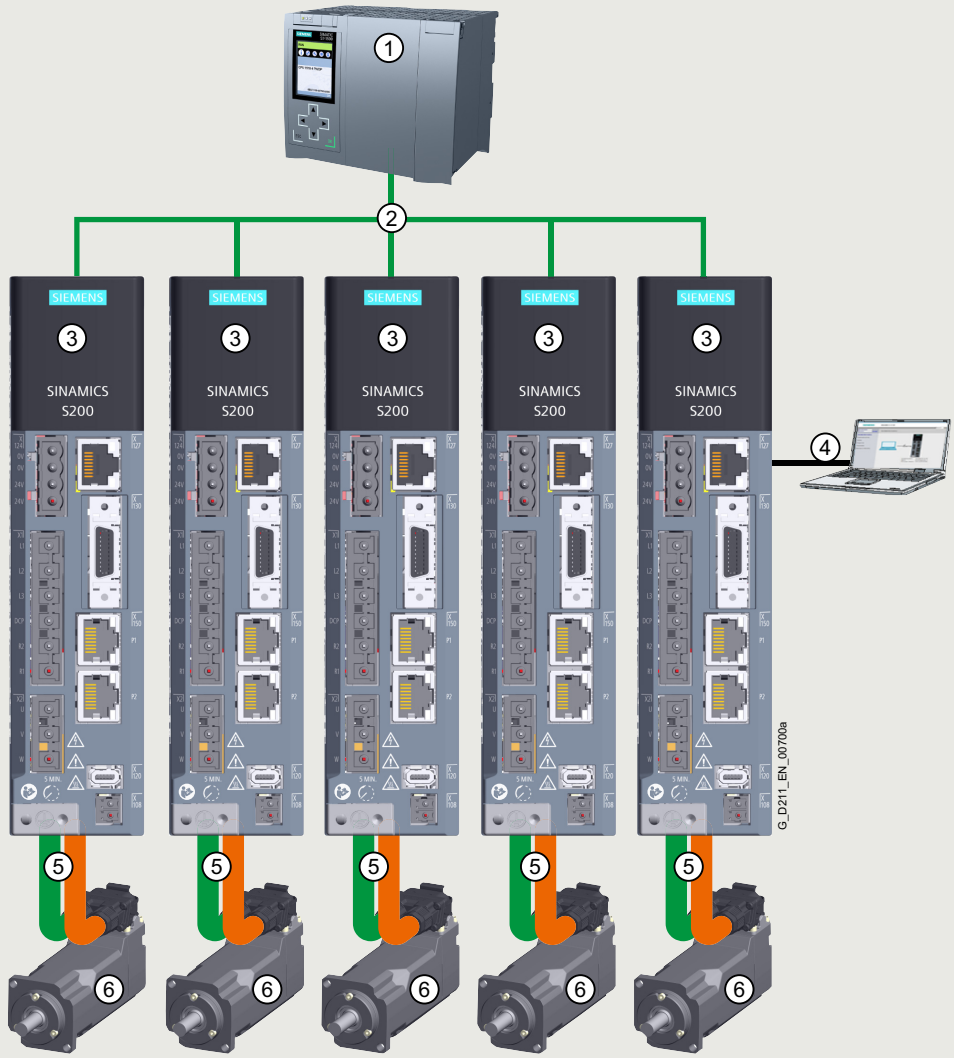

① Controller (for example SIMATIC S7-1500)

② Communication between the converter and the controller via PROFINET

③ SINAMICS S200 converter product line (PROFINET version)

④ Engineering via LAN with the web server in the converter

⑤ MOTION-CONNECT 350 or MOTION-CONNECT 380 cables for connecting motor, motor holding brake and encoder

⑥ SIMOTICS S-1FL2 servomotor

System topology SINAMICS S200 servo drive system, PROFINET version

© Siemens 2025

Configuration

The following electronic configuring aids and engineering tools are available for the SINAMICS S200 servo drive system:

DriveSim Designer (firmware V6.2 or higher)

DriveSim Designer provides easy-to-use models for PROFIdrive-enabled SINAMICS converters, so you can create a digital twin of your drive.

More information is provided on the internet at:
www.siemens.com/drive-virtualization

You can find more information on DriveSim Designer in the Engineering tools section.

SINAMICS Selector app

Mobile selection guide for frequency converters

Siemens has developed the SINAMICS Selector app as a practical tool for finding article numbers for your SINAMICS converters in a power range from 0.1 kW to 630 kW quickly and easily. Whether for SINAMICS V20, SINAMICS V90, SINAMICS G120C, SINAMICS G120P, SINAMICS G120X, SINAMICS G120, SINAMICS G220, SINAMICS S200 or SINAMICS S210: the app will provide you with the correct article numbers conveniently.

How does it work?
Simply select your application, the frequency converter you require, the rated power and device options as well as the necessary accessories.

Then you can save your selection and send it by email. Your preselection is the basis for an order specification with the dealer/Siemens.

You will find free downloads for Android and iOS here:
www.siemens.com/sinamics-selector

Siemens Product Configurator

The Siemens Product Configurator helps you configure the optimum drive technology products for a number of applications – starting with gearboxes, motors, converters as well as the associated options and components and ending with controllers, software licenses and connection systems.

The Siemens Product Configurator can be used on the internet without requiring any installation. The
Siemens Product Configurator can be found in SiePortal at the following address:
www.siemens.com/spc

You can find more information on the
Siemens Product Configurator in the Engineering tools section.

© Siemens 2025

Configuration

Drive dimensioning of the SINAMICS S200 servo drive system with the TIA Selection Tool

The SINAMICS S200 servo drive system is easily configured with the TIA Selection Tool under the Drive Dimensioning plug-in. It provides support when selecting the hardware and firmware components necessary to implement a drive task. The plug-in encompasses the configuration of the entire drive system and allows the handling of individual drives.

- Intuitive user interface, menu-based operation and help
- Configuration of the SINAMICS S200 servo drive system
- Adjustable traversing cycles and various mechanical systems integrated for single-axis applications
- Interface to the TIA Portal and SiePortal

The TIA Selection Tool is available for free on the internet at www.siemens.com/tia-selection-tool-standalone

You can find more information on the TIA Selection Tool in the Engineering tools section.

SINAMICS web server for SINAMICS S200

The converter can be brought easily and quickly into operation and optimized with the web server. Additional software does not need to be installed as access comes directly from a web browser.

You can find more information about the SINAMICS web server for SINAMICS S200 in the Engineering tools section.

SINAMICS Startdrive commissioning tool (TIA Portal)

SINAMICS Startdrive is a tool for configuring, commissioning, and diagnosing the SINAMICS converter family and is integrated into TIA Portal (V18 SP2 or higher).

The SINAMICS Startdrive has been optimized with regard to user friendliness and consistent use of the TIA Portal benefits of a common working environment for PLC, HMI and drives. SINAMICS firmware V6.2 or higher is required for SINAMICS S200.

The SINAMICS Startdrive Advanced license is required for the Safety Integrated acceptance test.

The SINAMICS Startdrive commissioning tool is available for free on the internet at:
www.siemens.com/startdrive

You can find more information on the SINAMICS Startdrive commissioning tool in the Engineering tools section.

© Siemens 2025

Technical specifications

General technical specifications

	SINAMICS S200 servo drive system **Low Inertia** **for high dynamic performance** **200 V ... 240 V 1 AC / 3 AC**	**Medium Inertia** **for dynamic and smooth operational performance** **200 V ... 240 V 1 AC / 3 AC or** **380 V ... 480 V 3 AC**	**High Inertia** **for smooth operational performance** **380 V ... 480 V 3 AC**
SINAMICS S200 Basic servo converters			
Line voltage and power range	• 200 V … 240 V 1 AC / 3 AC (–15 % / +10 %), 0.1 kW … 1 kW	• 200 V … 240 V 1 AC / 3 AC (–15 % / +10 %), 0.1 kW … 1 kW	–
Communication and control type	• PROFINET RT/IRT (PN) for PROFINET version (PN): Speed control (TO), basic positioner control (EPOS) • Pulse Train Input version (PTI): Fast position control with pulse train input (Fast PTI)		–
Inputs and outputs	• PROFINET version (PN): 4 DI (incl. 2 fast DI), 1 DO • Pulse Train Input version (PTI): 6 DI, 4 DO		–
Frame sizes	• FSA, FSB, FSC		–
Safety Integrated Basic Functions	–		–
Holding brake control	• External relay and power supply required		–
Degree of protection	• IP20		–
SINAMICS S200 servo converters			
Line voltage and power range	• 200 V … 240 V 1 AC / 3 AC (–15 % / +10 %), 0.1 kW … 1 kW	• 200 V … 240 V 1 AC / 3 AC (–15 % / +10 %), 0.1 kW … 1 kW • 380 V … 480 V 3 AC (–15 % / +10 %), 0.2 kW … 1.5 kW	• 380 V … 480 V 3 AC (–15 % / +10 %), 0.4 kW … 7 kW
Communication and control type	• PROFINET RT/IRT (PN) for PROFINET version (PN): Speed control (TO), basic positioner control (EPOS) • Modbus RTU for Pulse Train Input version (PTI): Fast position control with pulse train input (Fast PTI), speed control (S), torque control (T), compound speed/torque control (S/T)		
Inputs and outputs	• PROFINET version (PN): 4 DI (incl. 2 fast DI), 2 DO • Pulse Train Input version (PTI): 10 DI (incl. 2 fast DI), 6 DO, 2 AI, 2 AO		
Frame sizes	• FSA, FSB, FSC		• FSA, FSB, FSC, FSD
Safety Integrated Basic Functions	• Safe Torque Off (STO)		
Degree of protection	• IP20		
Holding brake control	• Integrated holding brake control		
SIMOTICS S-1FL2 servomotors			
Shaft height	• 20, 30, 40, 40 Compact, 52	• 30, 40, 40 Compact, 48	• 45, 65, 90
Rated torque	• 0.16 ... 6.60 Nm (0.12 … 4.87 lbf-ft)	• 0.64 ... 4.60 Nm (0.47 … 3.39 lbf-ft)	• 1.27 ... 33.40 Nm (0.94 … 24.63 lbf-ft)
Rated power	• 0.05 ... 2.1 kW	• 0.2 ... 1.45 kW	• 0.4 ... 7 kW
Rated speed	• 3000 r/min		• 3000 r/min for shaft height 45 • 2000 r/min for shaft heights 65, 90
Max. speed	• 6500 r/min for shaft heights 20, 30, 40, 40 Compact • 6000 r/min for shaft height 52	• 6500 r/min for shaft heights 30, 40, 40 Compact • 6000 r/min for shaft height 48	• 4000 r/min for shaft height 45 • 3000 r/min for shaft height 65 • 2000 r/min, 2500 r/min or 3000 r/min for shaft height 90
Encoder	• Absolute encoder 17-bit singleturn • Absolute encoder 21-bit singleturn • Absolute encoder 21-bit singleturn + 12-bit multiturn		
Degree of protection	• IP54 for shaft heights 20, 30, 40 Optional: IP65 • IP65, natural cooling, with shaft sealing ring for shaft heights 40 Compact, 52	• IP54 for shaft heights 30, 40 Optional: IP65 • IP65, natural cooling, with shaft sealing ring for shaft heights 40 Compact, 48	• IP65, natural cooling, with shaft sealing ring
Connection technology	• Metal hybrid connector for shaft heights 20, 30, 40, 40 Compact • Metal circular connector for shaft height 52	• Metal hybrid connector for shaft heights 30, 40, 40 Compact • Metal circular connector for shaft height 48	• Metal circular connector
MOTION-CONNECT 350 and 380 connection systems			
Cable	• Pre-assembled dual cables for power and signals for shaft heights 20, 30, 40, 40 Compact • Pre-assembled power and signal cables for shaft height 52	• Pre-assembled dual cables for power and signals for shaft heights 30, 40, 40 Compact • Pre-assembled power and signal cables for shaft height 48	• Pre-assembled power cables • Pre-assembled encoder cables • Pre-assembled brake cables
Length	3 m (9.84 ft), 5 m (16.4 ft), 7 m (23.0 ft), 10 m (32.8 ft), 15 m (49.2 ft), 20 m (65.6 ft), 30 m (98,4 ft)		
Outlet direction	Shaft heights 20, 30, 40, 40 Compact: • Drive end (DE) • Non drive end (NDE) Shaft height 52: • Rotatable	Shaft heights 30, 40, 40 Compact: • Drive end (DE) • Non drive end (NDE) Shaft height 48: • Rotatable	• Rotatable

© Siemens 2025

Selection and ordering data

SIMOTICS S-1FL2 servomotors – Further info in section "SIMOTICS S-1FL2 servomotors".

Max. speed	Rated power [1]	Static torque	Rated torque [1]	Max. torque [1]	Rated current	Max. current		Torque constant	Moment of inertia of rotor		Recommended load to motor inertia ratio, max.	Weight [2]	
$n_{max.}$	P_N at ΔT=100 K	M_0 at ΔT=100 K	M_N at ΔT=100 K	M_{max}	I_N at ΔT=100 K	I_{max}			$J_{without\ brake}$	$J_{with\ brake}$		$m_{without\ brake}$	$m_{with\ brake}$
r/min	kW (hp)	Nm	Nm	Nm	A	A	Article No.	Nm/A	kg cm²	kg cm²		kg	kg
SIMOTICS S-1FL2 Low Inertia servomotors – For high dynamic performance													
Shaft height 20 – Rated speed n_N 3000 r/min – Line voltage 200 ... 240 V 1 AC / 3 AC													
6500	0.05 (0.07)	0.16	0.16	0.56	0.81	3.1	**1FL2102-2AG ■ ■ - ■ ■ C 0**	0.2	0.017	0.022	40×	0.29	0.46
6500	0.10 (0.14)	0.32	0.32	1.12	0.76	2.95	**1FL2102-4AG ■ ■ - ■ ■ C 0**	0.42	0.029	0.034	30×	0.39	0.56
Shaft height 20 – Rated speed n_N 3000 r/min – Line voltage 380 ... 480 V 3 AC													
6500	0.05 (0.07)	0.16	0.16	0.56	0.84	3.4	**1FL2102-2AF ■ ■ - ■ ■ C 0**	0.19	0.017	0.022	40×	0.29	0.45
6500	0.10 (0.14)	0.32	0.32	1.12	0.81	2.9	**1FL2102-4AF ■ ■ - ■ ■ C 0**	0.4	0.029	0.034	30×	0.38	0.55
Shaft height 30 – Rated speed n_N 3000 r/min – Line voltage 200 ... 240 V 1 AC / 3 AC													
6500	0.20 (0.27)	0.64	0.64	2.24	1.28	4.8	**1FL2103-2AG ■ ■ - ■ ■ C 0**	0.5	0.08	0.11	30×	0.79	1.14
6500	0.40 (0.54)	1.27	1.27	4.45	2.4	8.7	**1FL2103-4AG ■ ■ - ■ ■ C 0**	0.53	0.155	0.185		1.16	1.5
Shaft height 30 – Rated speed n_N 3000 r/min – Line voltage 380 ... 480 V 3 AC													
6500	0.20 (0.27)	0.64	0.64	2.24	1.3	4.8	**1FL2103-2AF ■ ■ - ■ ■ C 0**	0.49	0.08	0.11	30×	0.78	1.12
6500	0.40 (0.54)	1.27	1.27	4.45	1.3	4.8	**1FL2103-4AF ■ ■ - ■ ■ C 0**	0.98	0.155	0.185		1.14	1.49
Shaft height 40 or 40 Compact – Rated speed n_N 3000 r/min – Line voltage 200 ... 240 V 1 AC / 3 AC													
6500	0.75 (1.02)	2.4	2.4	8	4.4	16	**1FL2104-2AG ■ ■ - ■ ■ C 0**	0.55	0.5	0.58	20×	2.7	3.5
6500	0.75 (1.02)	2.4	2.4	8.4	4.2	16	**1FL2104-2BG ■ 1 - ■ ■ C 0**	0.57	0.67	0.77		2.0	2.8
6500	1.00 (1.36)	3.2	3.2	10.8	4.4	16	**1FL2104-4AG ■ ■ - ■ ■ C 0**	0.73	0.63	0.71		3.3	4.1
6500	1.00 (1.36)	3.2	3.2	11.2	4.4	16	**1FL2104-4BG ■ 1 - ■ ■ C 0**	0.73	0.87	0.97		2.4	3.2
Shaft height 40 or 40 Compact – Rated speed n_N 3000 r/min – Line voltage 380 ... 480 V 3 AC													
6500	0.75 (1.02)	2.4	2.4	8	2.1	7.6	**1FL2104-2AF ■ ■ - ■ ■ C 0**	1.14	0.5	0.58	20×	2.7	3.5
6500	0.75 (1.02)	2.4	2.4	8.4	2.4	9.3	**1FL2104-2BF ■ 1 - ■ ■ C 0**	1.0	0.67	0.77		2.0	2.8
6500	1.00 (1.36)	3.2	3.2	10.8	3	10.9	**1FL2104-4AF ■ ■ - ■ ■ C 0**	1.07	0.63	0.71		3.3	4.1
6500	1.00 (1.36)	3.2	3.2	11.2	3	10.9	**1FL2104-4BF ■ 1 - ■ ■ C 0**	1.07	0,87	0,97		2.4	3.2
Shaft height 52 – Rated speed n_N 3000 r/min – Line voltage 380 ... 480 V 3 AC													
6000	1.45 (2.04)	5	4.6	15.9	4.35	18	**1FL2105-2AF ■ 1 - ■ ■ B 0**	1.08	1.71	2.54	20×	5.5	6.4
6000	2.10 (2.72)	8	6.6	25.3	5.6	24	**1FL2105-4AF ■ 1 - ■ ■ B 0**	1.19	2.65	3.48	15×	7.8	8.7

Brake	
Without	0
Holding brake	1
Degree of protection	
IP54	0
IP65 (with shaft sealing ring)	1
Shaft end, feather key	
Plain shaft	0
Shaft with feather key (half-key balancing)	1
Encoder	
Absolute encoder 17-bit singleturn	H
Absolute encoder 21-bit singleturn	S
Absolute encoder 21-bit singleturn + 12-bit multiturn	M
Connection technology	
Metal circular connector	B
Metal hybrid connector	C

In addition, the Siemens Product Configurator can be used on the internet: www.siemens.com/sinamics-s200/configuration.

For footnotes, see next page.

© Siemens 2025

	SINAMICS S200 servo converters Further info in section "SINAMICS S200 servo converters".			Line filter			Recommended standard fuse More information at www.siemens.com/sinamics-s200/ocpd				Recommended circuit breaker
	Max. motor power		Frame size	With one of the recommended line filters, IEC 61800-3 category C2 can be reached in combination with SINAMICS S200 for motor cable lengths up to 30 m (98.5 ft).			IEC-compliant		UL/cUL-compliant		IEC/UL/cUL-compliant
				Line voltage	I_N		I	3NA3	I	Fuse type	3RV2
	kW (hp)	Article No.		V	A	Article No.	A	Article No.	A	Class	Article No.
	SINAMICS S200 and SINAMICS S200 Basic servo converters										
	Line voltage 200 ... 240 V 1 AC / 3 AC										
	0.10 (0.14)	**6SL5 ■ 10-1BB10-1A ■ 0**	FSA	1 AC 200 ... 240	18	**6SL5550-0XB21-8CA0**	4	**3NA3804**	3	J	**3RV2011-1EA10**
				3 AC 200 ... 240	5	**6SL3203-0BE15-0VA0**					
	Line voltage 380 ... 480 V 3 AC										
	0.20 (0.27)	**6SL5 5 10-1BE10-2A ■ 0**	FSA	3 AC 380 ... 480	5	**6SL5550-0XE20-5CA0**	4	**3NA3804**	3	J	**3RV2011-1CA10**
	Line voltage 200 ... 240 V 1 AC / 3 AC										
	0.20 (0.27)	**6SL5 ■ 10-1BB10-2A ■ 0**	FSA	1 AC 200 ... 240	18	**6SL5550-0XB21-8CA0**	4	**3NA3804**	3	J	**3RV2011-1EA10**
				3 AC 200 ... 240	5	**6SL3203-0BE15-0VA0**					
	0.40 (0.54)	**6SL5 ■ 10-1BB10-4A ■ 0**	FSB	1 AC 200 ... 240	18	**6SL5550-0XB21-8CA0**	6	**3NA3801**	6	J	**3RV2011-1HA10**
				3 AC 200 ... 240	5	**6SL3203-0BE15-0VA0**					**3RV2011-1EA10**
	Line voltage 380 ... 480 V 3 AC										
	0.20 (0.27)	**6SL5 5 10-1BE10-2A ■ 0**	FSA	3 AC 380 ... 480	5	**6SL5550-0XE20-5CA0**	4	**3NA3804**	3	J	**3RV2011-1CA10**
	0.40 (0.54)	**6SL5 5 10-1BE10-4A ■ 0**									**3RV2021-1DA10**
	Line voltage 200 ... 240 V 1 AC / 3 AC										
	0.75 (1.02)	**6SL5 ■ 10-1BB10-8A ■ 0**	FSC	1 AC 200 ... 240	18	**6SL5550-0XB21-8CA0**	16	**3NA3805**	15	J	**3RV2011-1KA10**
				3 AC 200 ... 240	5	**6SL3203-0BE15-0VA0**					**3RV2011-1HA10**
	1.00 (1.36)	**6SL5 ■ 10-1BB11-0A ■ 0**	FSC	1 AC 200 ... 240	18	**6SL5550-0XB21-8CA0**	16	**3NA3805**	15	J	**3RV2011-1KA10**
				3 AC 200 ... 240	5	**6SL3203-0BE15-0VA0**					**3RV2011-1JA10**
	Line voltage 380 ... 480 V 3 AC										
	0.75 (1.02)	**6SL5 5 10-1BE10-8A ■ 0**	FSB	3 AC 380 ... 480	5	**6SL5550-0XE20-5CA0**	10	**3NA3803**	10	J	**3RV2021-1EA10**
	1.00 (1.36)	**6SL5 5 10-1BE11-0A ■ 0**									**3RV2021-1FA10**
	Line voltage 380 ... 480 V 3 AC										
	1.75 (2.38)	**6SL5 5 10-1BE11-5A ■ 0**	FSC	3 AC 380 ... 480	12	**6SL5550-0XE21-2CA0**	16	**3NA3805**	15	J	**3RV2011-4AA10**
	2.50 (3.40)	**6SL5 5 10-1BE12-5A ■ 0**							20		**3RV2011-4AA10**

Servo converter	
SINAMICS S200	**5**
SINAMICS S200 Basic	**6**
Version	
Pulse Train Input (PTI)	**A**
PROFINET (PN)	**F**

1) Rated torque, rated power and maximum torque listed in the table above allow for a production tolerance of 10 %.

2) Motor weight with absolute encoder 17-bit singleturn.

© Siemens 2025

Selection and ordering data

SIMOTICS S-1FL2 servomotors – Further info in section "SIMOTICS S-1FL2 servomotors"

Max. speed $n_{max.}$ r/min	Rated power [1] P_N at ΔT=100 K kW (hp)	Static torque M_0 at ΔT=100 K Nm	Rated torque [1] M_N at ΔT=100 K Nm	Max. torque [1] M_{max} Nm	Rated current I_N at ΔT=100 K A	Max. current I_{max} A	Article No.	Torque constant Nm/A	Moment of inertia of rotor $J_{without\ brake}$ kg cm²	$J_{with\ brake}$ kg cm²	Recommended load to motor inertia ratio, max.	Weight [2] $m_{without\ brake}$ kg	$m_{with\ brake}$ kg
SIMOTICS S-1FL2 Low Inertia servomotors – For high dynamic performance													
Shaft height 20 – Rated speed n_N 3000 r/min – Line voltage 200 ... 240 V 1 AC / 3 AC													
6500	0.05 (0.07)	0.16	0.16	0.56	0.81	3.1	**1FL2102-2AG ■ ■ - ■ ■ C 0**	0.2	0.017	0.022	40×	0.29	0.46
6500	0.10 (0.14)	0.32	0.32	1.12	0.76	2.95	**1FL2102-4AG ■ ■ - ■ ■ C 0**	0.42	0.029	0.034	30×	0.39	0.56
Shaft height 20 – Rated speed n_N 3000 r/min – Line voltage 380 ... 480 V 3 AC													
6500	0.05 (0.07)	0.16	0.16	0.56	0.84	3.4	**1FL2102-2AF ■ ■ - ■ ■ C 0**	0.19	0.017	0.022	40×	0.29	0.45
6500	0.10 (0.14)	0.32	0.32	1.12	0.81	2.9	**1FL2102-4AF ■ ■ - ■ ■ C 0**	0.4	0.029	0.034	30×	0.38	0.55
Shaft height 30 – Rated speed n_N 3000 r/min – Line voltage 200 ... 240 V 1 AC / 3 AC													
6500	0.20 (0.27)	0.64	0.64	2.24	1.28	4.8	**1FL2103-2AG ■ ■ - ■ ■ C 0**	0.5	0.08	0.11	30×	0.79	1.14
6500	0.40 (0.54)	1.27	1.27	4.45	2.4	8.7	**1FL2103-4AG ■ ■ - ■ ■ C 0**	0.53	0.155	0.185		1.16	1.5
Shaft height 30 – Rated speed n_N 3000 r/min – Line voltage 380 ... 480 V 3 AC													
6500	0.20 (0.27)	0.64	0.64	2.24	1.3	4.8	**1FL2103-2AF ■ ■ - ■ ■ C 0**	0.49	0.08	0.11	30×	0.78	1.12
6500	0.40 (0.54)	1.27	1.27	4.45	1.3	4.8	**1FL2103-4AF ■ ■ - ■ ■ C 0**	0.98	0.155	0.185		1.14	1.49
Shaft height 40 or 40 Compact – Rated speed n_N 3000 r/min – Line voltage 200 ... 240 V 1 AC / 3 AC													
6500	0.75 (1.02)	2.4	2.4	8	4.4	16	**1FL2104-2AG ■ ■ - ■ ■ C 0**	0.55	0.5	0.58	20×	2.7	3.5
6500	0.75 (1.02)	2.4	2.4	8.4	4.2	16	**1FL2104-2BG ■ 1 - ■ ■ C 0**	0.57	0.67	0.77		2.0	2.8
6500	1.00 (1.36)	3.2	3.2	10.8	4.4	16	**1FL2104-4AG ■ ■ - ■ ■ C 0**	0.73	0.63	0.71		3.3	4.1
6500	1.00 (1.36)	3.2	3.2	11.2	4.4	16	**1FL2104-4BG ■ 1 - ■ ■ C 0**	0.73	0.87	0.97		2.4	3.2
Shaft height 40 or 40 Compact – Rated speed n_N 3000 r/min – Line voltage 380 ... 480 V 3 AC													
6500	0.75 (1.02)	2.4	2.4	8	2.1	7.6	**1FL2104-2AF ■ ■ - ■ ■ C 0**	1.14	0.5	0.58	20×	2.7	3.5
6500	0.75 (1.02)	2.4	2.4	8.4	2.4	9.3	**1FL2104-2BF ■ 1 - ■ ■ C 0**	1.0	0.67	0.77		2.0	2.8
6500	1.00 (1.36)	3.2	3.2	10.8	3	10.9	**1FL2104-4AF ■ ■ - ■ ■ C 0**	1.07	0.63	0.71		3.3	4.1
6500	1.00 (1.36)	3.2	3.2	11.2	3	10.9	**1FL2104-4BF ■ 1 - ■ ■ C 0**	1.07	0,87	0,97		2.4	3.2
Shaft height 52 – Rated speed n_N 3000 r/min – Line voltage 380 ... 480 V 3 AC													
6000	1.45 (2.04)	5	4.6	15.9	4.35	18	**1FL2105-2AF ■ 1 - ■ ■ B 0**	1.08	1.71	2.54	20×	5.5	6.4
6000	2.10 (2.72)	8	6.6	25.3	5.6	24	**1FL2105-4AF ■ 1 - ■ ■ B 0**	1.19	2.65	3.48	15×	7.8	8.7

Brake	
Without	0
Holding brake	1
Degree of protection	
IP54	0
IP65 (with shaft sealing ring)	1
Shaft end, feather key	
Plain shaft	0
Shaft with feather key (half-key balancing)	1
Encoder	
Absolute encoder 17-bit singleturn	H
Absolute encoder 21-bit singleturn	S
Absolute encoder 21-bit singleturn + 12-bit multiturn	M
Connection technology	
Metal circular connector	B
Metal hybrid connector	C

In addition, the Siemens Product Configurator can be used on the internet: www.siemens.com/sinamics-s200/configuration

[1] Rated torque, rated power and maximum torque listed in the table above allow for a production tolerance of 10 %.

[2] Motor weight with absolute encoder 17-bit singleturn.

© Siemens 2025

	MOTION-CONNECT connection systems – Further info in section "MOTION-CONNECT 350 and 380 connection systems".					
	Pre-assembled dual cables for power and communication		Pre-assembled power cables		Pre-assembled cables for communication	
					SINAMICS S200 – Absolute encoder on the 1FL2 servomotor	
	No. of cores × cross-section mm²	Article No.	No. of cores × cross-section mm²	Article No.	No. of cores × cross-section mm²	Article No.
	MOTION-CONNECT connection systems					
	4 × 0.75 / 3 × 2 × 0.25 [1] or 4 × 0.75 / 3 × 2 × 0.25 [1] / 2 × 0.38	**6FX3 ■02-7 ■ ■01-1 ■ ■0**	–	–	–	–
	4 × 0.75 / 3 × 2 × 0.25 [1] or 4 × 0.75 / 3 × 2 × 0.25 [1] / 2 × 0.38	**6FX3 ■02-7 ■ ■01-1 ■ ■0**	–	–	–	–
	4 × 0.75 / 3 × 2 × 0.25 [1] or 4 × 0.75 / 3 × 2 × 0.25 [1] / 2 × 0.38	**6FX3 ■02-7 ■ ■01-1 ■ ■0**	–	–	–	–
	4 × 0.75 / 3 × 2 × 0.25 [1] or 4 × 0.75 / 3 × 2 × 0.25 [1] / 2 × 0.38	**6FX3 ■02-7 ■ ■01-1 ■ ■0**	–	–	–	–
	4 × 0.75 / 3 × 2 × 0.25 [1] or 4 × 0.75 / 3 × 2 × 0.25 [1] / 2 × 0.38	**6FX3 ■02-7 ■ ■01-1 ■ ■0**	–	–	–	–
	4 × 0.75 / 3 × 2 × 0.25 [1] or 4 × 0.75 / 3 × 2 × 0.25 [1] / 2 × 0.38	**6FX3 ■02-7 ■ ■01-1 ■ ■0**	–	–	–	–
	–	–	4 × 0.75 or 4 × 0.75 / 2 × 0.38	**6FX3 ■ 02-5 ■ K32-1 ■ ■0**	3 × 2 × 0.25 [1]	**6FX3 ■02-2XB11-1 ■ ■0**
Connection system						
MOTION-CONNECT 350	**5**			**5**		**5**
MOTION-CONNECT 380	**8**			**8**		**8**
Brake cores						
Without	**C**			**C**		
With	**D**			**D**		
Outlet direction						
Drive end (DE)	**D**					
Non drive end (NDE)	**N**					
Length						
3 m	**A**	**D**	**A**	**D**	**A**	**D**
5 m	**A**	**F**	**A**	**F**	**A**	**F**
7 m	**A**	**H**	**A**	**H**	**A**	**H**
10 m	**B**	**A**	**B**	**A**	**B**	**A**
15 m	**C**	**F**	**C**	**F**	**C**	**F**
20 m	**D**	**A**	**D**	**A**	**D**	**A**
30 m						

[1] No. of cores × cross-section for encoder cable in mm² for:
Length <20 m: 3 x 2 x 0.25
Length ≥ 20 m: 2 x 2 x 0.25 + 2 x 0.38

© Siemens 2025

Selection and ordering data

SIMOTICS S-1FL2 servomotors – Further info in section "SIMOTICS S-1FL2 servomotors"

Max. speed $n_{max.}$ r/min	Rated power [1] P_N at ΔT=100 K kW (hp)	Static torque M_0 at ΔT=100 K Nm	Rated torque [1] M_N at ΔT=100 K Nm	Max. torque [1] M_{max} Nm	Rated current I_N at ΔT=100 K A	Max. current I_{max} A	Article No.	Torque constant Nm/A	Moment of inertia of rotor $J_{without\ brake}$ kg cm²	$J_{with\ brake}$ kg cm²	Recommended load to motor inertia ratio, max.	Weight [2] $m_{without\ brake}$ kg	$m_{with\ brake}$ kg
SIMOTICS S-1FL2 Low Inertia servomotors – For high dynamic performance													
Shaft height 20 – Rated speed n_N 3000 r/min – Line voltage 200 ... 240 V 1 AC / 3 AC													
6500	0.05 (0.07)	0.16	0.16	0.56	0.81	3.1	**1FL2102-2AG ■ ■ - ■ ■ C 0**	0.2	0.017	0.022	40×	0.29	0.46
6500	0.10 (0.14)	0.32	0.32	1.12	0.76	2.95	**1FL2102-4AG ■ ■ - ■ ■ C 0**	0.42	0.029	0.034	30×	0.39	0.56
Shaft height 20 – Rated speed n_N 3000 r/min – Line voltage 380 ... 480 V 3 AC													
6500	0.05 (0.07)	0.16	0.16	0.56	0.84	3.4	**1FL2102-2AF ■ ■ - ■ ■ C 0**	0.19	0.017	0.022	40×	0.29	0.45
6500	0.10 (0.14)	0.32	0.32	1.12	0.81	2.9	**1FL2102-4AF ■ ■ - ■ ■ C 0**	0.4	0.029	0.034	30×	0.38	0.55
Shaft height 30 – Rated speed n_N 3000 r/min – Line voltage 200 ... 240 V 1 AC / 3 AC													
6500	0.20 (0.27)	0.64	0.64	2.24	1.28	4.8	**1FL2103-2AG ■ ■ - ■ ■ C 0**	0.5	0.08	0.11	30×	0.79	1.14
6500	0.40 (0.54)	1.27	1.27	4.45	2.4	8.7	**1FL2103-4AG ■ ■ - ■ ■ C 0**	0.53	0.155	0.185		1.16	1.5
Shaft height 30 – Rated speed n_N 3000 r/min – Line voltage 380 ... 480 V 3 AC													
6500	0.20 (0.27)	0.64	0.64	2.24	1.3	4.8	**1FL2103-2AF ■ ■ - ■ ■ C 0**	0.49	0.08	0.11	30×	0.78	1.12
6500	0.40 (0.54)	1.27	1.27	4.45	1.3	4.8	**1FL2103-4AF ■ ■ - ■ ■ C 0**	0.98	0.155	0.185		1.14	1.49
Shaft height 40 or 40 Compact – Rated speed n_N 3000 r/min – Line voltage 200 ... 240 V 1 AC / 3 AC													
6500	0.75 (1.02)	2.4	2.4	8	4.4	16	**1FL2104-2AG ■ ■ - ■ ■ C 0**	0.55	0.5	0.58	20×	2.7	3.5
6500	0.75 (1.02)	2.4	2.4	8.4	4.2	16	**1FL2104-2BG ■ 1 - ■ ■ C 0**	0.57	0.67	0.77		2.0	2.8
6500	1.00 (1.36)	3.2	3.2	10.8	4.4	16	**1FL2104-4AG ■ ■ - ■ ■ C 0**	0.73	0.63	0.71		3.3	4.1
6500	1.00 (1.36)	3.2	3.2	11.2	4.4	16	**1FL2104-4BG ■ 1 - ■ ■ C 0**	0.73	0.87	0.97		2.4	3.2
Shaft height 40 or 40 Compact – Rated speed n_N 3000 r/min – Line voltage 380 ... 480 V 3 AC													
6500	0.75 (1.02)	2.4	2.4	8	2.1	7.6	**1FL2104-2AF ■ ■ - ■ ■ C 0**	1.14	0.5	0.58	20×	2.7	3.5
6500	0.75 (1.02)	2.4	2.4	8.4	2.4	9.3	**1FL2104-2BF ■ 1 - ■ ■ C 0**	1.0	0.67	0.77		2.0	2.8
6500	1.00 (1.36)	3.2	3.2	10.8	3	10.9	**1FL2104-4AF ■ ■ - ■ ■ C 0**	1.07	0.63	0.71		3.3	4.1
6500	1.00 (1.36)	3.2	3.2	11.2	3	10.9	**1FL2104-4BF ■ 1 - ■ ■ C 0**	1.07	0,87	0,97		2.4	3.2
Shaft height 52 – Rated speed n_N 3000 r/min – Line voltage 380 ... 480 V 3 AC													
6000	1.45 (2.04)	5	4.6	15.9	4.35	18	**1FL2105-2AF ■ 1 - ■ ■ B 0**	1.08	1.71	2.54	20×	5.5	6.4
6000	2.10 (2.72)	8	6.6	25.3	5.6	24	**1FL2105-4AF ■ 1 - ■ ■ B 0**	1.19	2.65	3.48	15×	7.8	8.7

Brake					
Without	0				
Holding brake	1				
Degree of protection					
IP54		0			
IP65 (with shaft sealing ring)		1			
Shaft end, feather key					
Plain shaft			0		
Shaft with feather key (half-key balancing)			1		
Encoder					
Absolute encoder 17-bit singleturn				H	
Absolute encoder 21-bit singleturn				S	
Absolute encoder 21-bit singleturn + 12-bit multiturn				M	
Connection technology					
Metal circular connector					B
Metal hybrid connector					C

In addition, the Siemens Product Configurator can be used on the internet: www.siemens.com/sinamics-s200/configuration

[1] Rated torque, rated power and maximum torque listed in the table above allow for a production tolerance of 10 %.

[2] Motor weight with absolute encoder 17-bit singleturn.

© Siemens 2025

	MOTION-CONNECT connection systems (continued) – Further info in section "MOTION-CONNECT 350 and 380 connection systems".						
	Pre-assembled cables for communication		**Connectors**				
	SINAMICS S200 – Brake on the 1FL2 servomotor with holding brake		Drive end (DE) direction	Non drive end (NDE) direction	Motor side		
	No. of cores × cross-section mm²	Article No.	for hybrid connection Article No.	for hybrid connection Article No.	for power connection Article No.	for encoder connection Article No.	for brake Article No.
	MOTION-CONNECT connection systems (continued)						
	–	–	**6FX2003-3HD00**	**6FX2003-3HN00**	–	–	–
	–	–	**6FX2003-3HD00**	**6FX2003-3HN00**	–	–	–
	–	–	**6FX2003-3HD00**	**6FX2003-3HN00**	–	–	–
	–	–	**6FX2003-3HD00**	**6FX2003-3HN00**	–	–	–
	–	–	**6FX2003-3HD00**	**6FX2003-3HN00**	–	–	–
	–	–	**6FX2003-3HD00**	**6FX2003-3HN00**	–	–	–
	–	–	–	–	**6FX2003-0LL63**	**6FX2003-0DB63**	– (in power connector)

MOTION-CONNECT connectors for SINAMICS S200 servo converters				
Crimp contacts "power and PE" (2000 pieces per reel) for hybrid connection	Crimp contacts "signal and brake" (2000 pieces per reel) for hybrid connection	Connectors converter side for power connection	IX signal connector, C coded for encoder connection	for brake
6FX2003-7HP00	**6FX2003-7HS00**	–	**6FX2003-0DE61**	–

© Siemens 2025

Selection and ordering data

SIMOTICS S-1FL2 servomotors – Further info in section "SIMOTICS S-1FL2 servomotors".

Max. speed $n_{max.}$ r/min	Rated power [1] P_N at ΔT=100 K kW (hp)	Static torque M_0 at ΔT=100 K Nm	Rated torque [1] M_N at ΔT=100 K Nm	Max. torque [1] M_{max} Nm	Rated current I_N at ΔT=100 K A	Max. current I_{max} A	Article No.	Torque constant Nm/A	Moment of inertia of rotor $J_{without\ brake}$ kg cm²	$J_{with\ brake}$ kg cm²	Recommended load to motor inertia ratio, max.	Weight [2] $m_{without\ brake}$ kg	$m_{with\ brake}$ kg
SIMOTICS S-1FL2 Medium Inertia servomotors – For dynamic and smooth operational performance													
Shaft height 30 – Rated speed n_N 3000 r/min – Line voltage 200 ... 240 V 1 AC / 3 AC													
6500	0.20 (0.27)	0.64	0.64	2.24	1.33	4.8	**1FL2203-2AG ■ ■ - ■ ■ C 0**	0.48	0.18	0.21	30×	0.76	1.11
6500	0.40 (0.54)	1.27	1.27	4.45	2.4	8.7	**1FL2203-4AG ■ ■ - ■ ■ C 0**	0.53	0.35	0.38		1.11	1.46
Shaft height 30 – Rated speed n_N 3000 r/min – Line voltage 380 ... 480 V 3 AC													
6500	0.20 (0.27)	0.64	0.64	2.24	1.3	4.8	**1FL2203-2AF ■ ■ - ■ ■ C 0**	0.49	0.18	0.21	30×	0.77	1.12
6500	0.40 (0.54)	1.27	1.27	4.45	1.3	4.8	**1FL2203-4AF ■ ■ - ■ ■ C 0**	0.98	0.35	0.38		1.09	1.44
Shaft height 40 or 40 Compact – Rated speed n_N 3000 r/min – Line voltage 200 ... 240 V 1 AC / 3 AC													
6500	0.75 (1.02)	2.4	2.4	7.5	4.4	14.2	**1FL2204-2AG ■ ■ - ■ ■ C 0**	0.55	1.23	1.31	15×	2.6	3.4
6500	0.75 (1.02)	2.4	2.4	8.4	4.4	16	**1FL2204-2BG ■ 1 - ■ ■ C 0**	0.55	1.27	1.37		2.0	2.8
6500	1.00 (1.36)	3.2	3.2	11.3	4.4	16	**1FL2204-4AG ■ ■ - ■ ■ C 0**	0.73	1.61	1.69		3.1	3.9
6500	1.00 (1.36)	3.2	3.2	11.3	4.4	16	**1FL2204-4BG ■ 1 - ■ ■ C 0**	0.73	1.67	1.77		2.4	3.2
Shaft height 40 or 40 Compact – Rated speed n_N 3000 r/min – Line voltage 380 ... 480 V 3 AC													
6500	0.75 (1.02)	2.4	2.4	7.5	2.25	7.1	**1FL2204-2AF ■ ■ - ■ ■ C 0**	1.07	1.23	1.31	15×	2.6	3.4
6500	0.75 (1.02)	2.4	2.4	8.4	2.5	9.3	**1FL2204-2BF ■ 1 - ■ ■ C 0**	0.96	1.27	1.37		2.0	2.8
6500	1.00 (1.36)	3.2	3.2	10	3	9.9	**1FL2204-4AF ■ ■ - ■ ■ C 0**	1.07	1.61	1.69		3.1	3.9
6500	1.00 (1.36)	3.2	3.2	11.2	3	10.9	**1FL2204-4BF ■ 1 - ■ ■ C 0**	1.07	1.67	1.77		2.4	3.2
Shaft height 48 – Rated speed n_N 3000 r/min – Line voltage 380 ... 480 V 3 AC													
6000	0.94 (1.36)	3.6	3	11.5	2.5	9.5	**1FL2205-2AF ■ 1 - ■ ■ B 0**	1.24	3.15	4.03	15×	3.6	4.7
6000	1.45 (2.04)	6	4.6	19.3	3.75	15.1	**1FL2205-4AF ■ 1 - ■ ■ B 0**	1.28	5.1	5.98		5	6.1

Brake	
Without	0
Holding brake	1
Degree of protection	
IP54	0
IP65 (with shaft sealing ring)	1
Shaft end, feather key	
Plain shaft	0
Shaft with feather key (half-key balancing)	1
Encoder	
Absolute encoder 17-bit singleturn	H
Absolute encoder 21-bit singleturn	S
Absolute encoder 21-bit singleturn + 12-bit multiturn	M
Connection technology	
Metal circular connector	B
Metal hybrid connector	C

In addition, the Siemens Product Configurator can be used on the internet: www.siemens.com/sinamics-s200/configuration

[1] Rated torque, rated power and maximum torque listed in the table above allow for a production tolerance of 10 %.

[2] Motor weight with absolute encoder 17-bit singleturn.

© Siemens 2025

	SINAMICS S200 servo converters Further info in section "SINAMICS S200 servo converters".			Line filter			Recommended standard fuse More information at www.siemens.com/sinamics-s200/ocpd				Recommended circuit breaker
	Max. motor power		Frame size	With one of the recommended line filters, IEC 61800-3 category C2 can be reached in combination with SINAMICS S200 for motor cable lengths up to 30 m (98.5 ft).			IEC-compliant		UL/cUL-compliant		IEC/UL/cUL-compliant
				Line voltage	I_N		I	3NA3	I	Fuse type	3RV2
	kW (hp)	Article No.		V	A	Article No.	A	Article No.	A	Class	Article No.
	SINAMICS S200 and SINAMICS S200 Basic servo converters										
	Line voltage 200 ... 240 V 1 AC / 3 AC										
	0.20 (0.27)	**6SL5 ■ 10-1BB10-2A ■ 0**	FSA	1 AC 200 ... 240	18	**6SL5550-0XB21-8CA0**	4	**3NA3804**	3	J	**3RV2011-1EA10**
				3 AC 200 ... 240	5	**6SL3203-0BE15-0VA0**					
	0.40 (0.54)	**6SL5 ■ 10-1BB10-4A ■ 0**	FSB	1 AC 200 ... 240	18	**6SL5550-0XB21-8CA0**	6	**3NA3801**	6	J	**3RV2011-1HA10**
				3 AC 200 ... 240	5	**6SL3203-0BE15-0VA0**					**3RV2011-1EA10**
	Line voltage 380 ... 480 V 3 AC										
	0.20 (0.27)	**6SL5 5 10-1BE10-2A ■ 0**	FSA	3 AC 380 ... 480	5	**6SL5550-0XE20-5CA0**	4	**3NA3804**	3	J	**3RV2011-1CA10**
	0.40 (0.54)	**6SL5 5 10-1BE10-4A ■ 0**									**3RV2011-1DA10**
	Line voltage 200 ... 240 V 1 AC / 3 AC										
	0.75 (1.02)	**6SL5 ■ 10-1BB10-8A ■ 0**	FSC	1 AC 200 ... 240	18	**6SL5550-0XB21-8CA0**	16	**3NA3805**	15	J	**3RV2011-1KA10**
				3 AC 200 ... 240	5	**6SL3203-0BE15-0VA0**					**3RV2011-1HA10**
	1.00 (1.36)	**6SL5 ■ 10-1BB11-0A■ 0**	FSC	1 AC 200 ... 240	18	**6SL5550-0XB21-8CA0**	16	**3NA3805**	15	J	**3RV2011-1KA10**
				3 AC 200 ... 240	5	**6SL3203-0BE15-0VA0**					**3RV2011-1JA10**
	Line voltage 380 ... 480 V 3 AC										
	0.75 (1.02)	**6SL5 5 10-1BE10-8A ■ 0**	FSB	3 AC 380 ... 480	5	**6SL5550-0XE20-5CA0**	10	**3NA3803**	10	J	**3RV2011-1EA10**
	1.00 (1.36)	**6SL5 5 10-1BE11-0A ■ 0**									**3RV2011-1FA10**
	Line voltage 380 ... 480 V 3 AC										
	1.00 (1.36)	**6SL5 5 10-1BE11-0A ■ 0**	FSB	3 AC 380 ... 480	5	**6SL3203-0BE15-0VA0**	10	**3NA3803**	10	J	**3RV2011-1FA10**
	1.75 (2.38)	**6SL5 5 10-1BE11-5A ■ 0**	FSC	3 AC 380 ... 480	12	**6SL5550-0XE21-2CA0**	16	**3NA3805**	15		**3RV2011-4AA10**

Servo converter	
SINAMICS S200	**5**
SINAMICS S200 Basic	**6**

Version	
Pulse Train Input (PTI)	**A**
PROFINET (PN)	**F**

© Siemens 2025

Selection and ordering data

SIMOTICS S-1FL2 servomotors – Further info in section "SIMOTICS S-1FL2 servomotors".

Max. speed $n_{max.}$ r/min	Rated power [1] P_N at ΔT=100 K kW (hp)	Static torque M_0 at ΔT=100 K Nm	Rated torque [1] M_N at ΔT=100 K Nm	Max. torque [1] M_{max} Nm	Rated current I_N at ΔT=100 K A	Max. current I_{max} A	Article No.	Torque constant Nm/A	Moment of inertia of rotor $J_{without\ brake}$ kg cm²	$J_{with\ brake}$ kg cm²	Recommended load to motor inertia ratio, max.	Weight [2] $m_{without\ brake}$ kg	$m_{with\ brake}$ kg
SIMOTICS S-1FL2 Medium Inertia servomotors – For dynamic and smooth operational performance													
Shaft height 30 – Rated speed n_N 3000 r/min – Line voltage 200 ... 240 V 1 AC / 3 AC													
6500	0.20 (0.27)	0.64	0.64	2.24	1.33	4.8	**1FL2203-2AG ■ ■ - ■ ■ C 0**	0.48	0.18	0.21	30×	0.76	1.11
6500	0.40 (0.54)	1.27	1.27	4.45	2.4	8.7	**1FL2203-4AG ■ ■ - ■ ■ C 0**	0.53	0.35	0.38		1.11	1.46
Shaft height 30 – Rated speed n_N 3000 r/min – Line voltage 380 ... 480 V 3 AC													
6500	0.20 (0.27)	0.64	0.64	2.24	1.3	4.8	**1FL2203-2AF ■ ■ - ■ ■ C 0**	0.49	0.18	0.21	30×	0.77	1.12
6500	0.40 (0.54)	1.27	1.27	4.45	1.3	4.8	**1FL2203-4AF ■ ■ - ■ ■ C 0**	0.98	0.35	0.38		1.09	1.44
Shaft height 40 or 40 Compact – Rated speed n_N 3000 r/min – Line voltage 200 ... 240 V 1 AC / 3 AC													
6500	0.75 (1.02)	2.4	2.4	7.5	4.4	14.2	**1FL2204-2AG ■ ■ - ■ ■ C 0**	0.55	1.23	1.31	15×	2.6	3.4
6500	0.75 (1.02)	2.4	2.4	8.4	4.4	16	**1FL2204-2BG ■ 1 - ■ ■ C 0**	0.55	1.27	1.37		2.0	2.8
6500	1.00 (1.36)	3.2	3.2	11.3	4.4	16	**1FL2204-4AG ■ ■ - ■ ■ C 0**	0.73	1.61	1.69		3.1	3.9
6500	1.00 (1.36)	3.2	3.2	11.3	4.4	16	**1FL2204-4BG ■ 1 - ■ ■ C 0**	0.73	1.67	1.77		2.4	3.2
Shaft height 40 or 40 Compact – Rated speed n_N 3000 r/min – Line voltage 380 ... 480 V 3 AC													
6500	0.75 (1.02)	2.4	2.4	7.5	2.25	7.1	**1FL2204-2AF ■ ■ - ■ ■ C 0**	1.07	1.23	1.31	15×	2.6	3.4
6500	0.75 (1.02)	2.4	2.4	8.4	2.5	9.3	**1FL2204-2BF ■ 1 - ■ ■ C 0**	0.96	1.27	1.37		2.0	2.8
6500	1.00 (1.36)	3.2	3.2	10	3	9.9	**1FL2204-4AF ■ ■ - ■ ■ C 0**	1.07	1.61	1.69		3.1	3.9
6500	1.00 (1.36)	3.2	3.2	11.2	3	10.9	**1FL2204-4BF ■ 1 - ■ ■ C 0**	1.07	1.67	1.77		2.4	3.2
Shaft height 48 – Rated speed n_N 3000 r/min – Line voltage 380 ... 480 V 3 AC													
6000	0.94 (1.36)	3.6	3	11.5	2.5	9.5	**1FL2205-2AF ■ 1 - ■ ■ B 0**	1.24	3.15	4.03	15×	3.6	4.7
6000	1.45 (2.04)	6	4.6	19.3	3.75	15.1	**1FL2205-4AF ■ 1 - ■ ■ B 0**	1.28	5.1	5.98		5	6.1

Brake	
Without	**0**
Holding brake	**1**
Degree of protection	
IP54	**0**
IP65 (with shaft sealing ring)	**1**
Shaft end, feather key	
Plain shaft	**0**
Shaft with feather key (half-key balancing)	**1**
Encoder	
Absolute encoder 17-bit singleturn	**H**
Absolute encoder 21-bit singleturn	**S**
Absolute encoder 21-bit singleturn + 12-bit multiturn	**M**
Connection technology	
Metal circular connector	**B**
Metal hybrid connector	**C**

In addition, the Siemens Product Configurator can be used on the internet: www.siemens.com/sinamics-s200/configuration

[1] Rated torque, rated power and maximum torque listed in the table above allow for a production tolerance of 10 %.

[2] Motor weight with absolute encoder 17-bit singleturn.

© Siemens 2025

	MOTION-CONNECT connection systems – Further info in section "MOTION-CONNECT 350 and 380 connection systems".					
	Pre-assembled dual cables for power and communication		Pre-assembled power cables		Pre-assembled cables for communication	
					SINAMICS S200 – Absolute encoder on the 1FL2 servomotor	
	No. of cores × cross-section mm²	Article No.	No. of cores × cross-section mm²	Article No.	No. of cores × cross-section mm²	Article No.
	MOTION-CONNECT connection systems					
	4 × 0.75 / 3 × 2 × 0.25 [1] or 4 × 0.75 / 3 × 2 × 0.25 [1] / 2 × 0.38	**6FX3 ■02-7 ■ ■01-1 ■ ■0**	–	–	–	–
	4 × 0.75 / 3 × 2 × 0.25 [1] or 4 × 0.75 / 3 × 2 × 0.25 [1] / 2 × 0.38	**6FX3 ■02-7 ■ ■01-1 ■ ■0**	–	–	–	–
	4 × 0.75 / 3 × 2 × 0.25 [1] or 4 × 0.75 / 3 × 2 × 0.25 [1] / 2 × 0.38	**6FX3 ■02-7 ■ ■01-1 ■ ■0**	–	–	–	–
	4 × 0.75 / 3 × 2 × 0.25 [1] or 4 × 0.75 / 3 × 2 × 0.25 [1] / 2 × 0.38	**6FX3 ■02-7 ■ ■01-1 ■ ■0**	–	–	–	–
	–	–	4 × 0.75 or 4 × 0.75 / 2 × 0.38	**6FX3 ■ 02-5 ■ K32-1 ■ ■0**	3 × 2 × 0.25 [1]	**6FX3 ■02-2XB11-1 ■ ■0**
Connection system						
MOTION-CONNECT 350	**5**			**5**		**5**
MOTION-CONNECT 380	**8**			**8**		**8**
Brake cores						
Without	**C**			**C**		
With	**D**			**D**		
Outlet direction						
Drive end (DE)	**D**					
Non drive end (NDE)	**N**					
Length						
3 m	**A**	**D**	**A**	**D**	**A**	**D**
5 m	**A**	**F**	**A**	**F**	**A**	**F**
7 m	**A**	**H**	**A**	**H**	**A**	**H**
10 m	**B**	**A**	**B**	**A**	**B**	**A**
15 m	**B**	**F**	**B**	**F**	**B**	**F**
20 m	**C**	**A**	**C**	**A**	**C**	**A**
30 m	**D**	**A**	**D**	**A**	**D**	**A**

[1] No. of cores × cross-section for encoder cable in mm² for:
Length <20 m: 3 x 2 x 0.25
Length ≥ 20 m: 2 x 2 x 0.25 + 2 x 0.38

© Siemens 2025

Selection and ordering data

SIMOTICS S-1FL2 servomotors – Further info in section "SIMOTICS S-1FL2 servomotors".

Max. speed $n_{max.}$ r/min	Rated power [1] P_N at ΔT=100 K kW (hp)	Static torque M_0 at ΔT=100 K Nm	Rated torque [1] M_N at ΔT=100 K Nm	Max. torque [1] M_{max} Nm	Rated current I_N at ΔT=100 K A	Max. current I_{max} A	Article No.	Torque constant Nm/A	Moment of inertia of rotor $J_{without\ brake}$ kg cm²	$J_{with\ brake}$ kg cm²	Recommended load to motor inertia ratio, max.	Weight [2] $m_{without\ brake}$ kg	$m_{with\ brake}$ kg
SIMOTICS S-1FL2 Medium Inertia servomotors – For dynamic and smooth operational performance													
Shaft height 30 – Rated speed n_N 3000 r/min – Line voltage 200 ... 240 V 1 AC / 3 AC													
6500	0.20 (0.27)	0.64	0.64	2.24	1.33	4.8	**1FL2203-2AG ■ ■ - ■ ■ C 0**	0.48	0.18	0.21	30×	0.76	1.11
6500	0.40 (0.54)	1.27	1.27	4.45	2.4	8.7	**1FL2203-4AG ■ ■ - ■ ■ C 0**	0.53	0.35	0.38		1.11	1.46
Shaft height 30 – Rated speed n_N 3000 r/min – Line voltage 380 ... 480 V 3 AC													
6500	0.20 (0.27)	0.64	0.64	2.24	1.3	4.8	**1FL2203-2AF ■ ■ - ■ ■ C 0**	0.49	0.18	0.21	30×	0.77	1.12
6500	0.40 (0.54)	1.27	1.27	4.45	1.3	4.8	**1FL2203-4AF ■ ■ - ■ ■ C 0**	0.98	0.35	0.38		1.09	1.44
Shaft height 40 or 40 Compact – Rated speed n_N 3000 r/min – Line voltage 200 ... 240 V 1 AC / 3 AC													
6500	0.75 (1.02)	2.4	2.4	7.5	4.4	14.2	**1FL2204-2AG ■ ■ - ■ ■ C 0**	0.55	1.23	1.31	15×	2.6	3.4
6500	0.75 (1.02)	2.4	2.4	8.4	4.4	16	**1FL2204-2BG ■ 1 - ■ ■ C 0**	0.55	1.27	1.37		2.0	2.8
6500	1.00 (1.36)	3.2	3.2	11.3	4.4	16	**1FL2204-4AG ■ ■ - ■ ■ C 0**	0.73	1.61	1.69		3.1	3.9
6500	1.00 (1.36)	3.2	3.2	11.3	4.4	16	**1FL2204-4BG ■ 1 - ■ ■ C 0**	0.73	1.67	1.77		2.4	3.2
Shaft height 40 or 40 Compact – Rated speed n_N 3000 r/min – Line voltage 380 ... 480 V 3 AC													
6500	0.75 (1.02)	2.4	2.4	7.5	2.25	7.1	**1FL2204-2AF ■ ■ - ■ ■ C 0**	1.07	1.23	1.31	15×	2.6	3.4
6500	0.75 (1.02)	2.4	2.4	8.4	2.5	9.3	**1FL2204-2BF ■ 1 - ■ ■ C 0**	0.96	1.27	1.37		2.0	2.8
6500	1.00 (1.36)	3.2	3.2	10	3	9.9	**1FL2204-4AF ■ ■ - ■ ■ C 0**	1.07	1.61	1.69		3.1	3.9
6500	1.00 (1.36)	3.2	3.2	11.2	3	10.9	**1FL2204-4BF ■ 1 - ■ ■ C 0**	1.07	1.67	1.77		2.4	3.2
Shaft height 48 – Rated speed n_N 3000 r/min – Line voltage 380 ... 480 V 3 AC													
6000	0.94 (1.36)	3.6	3	11.5	2.5	9.5	**1FL2205-2AF ■ 1 - ■ ■ B 0**	1.24	3.15	4.03	15×	3.6	4.7
6000	1.45 (2.04)	6	4.6	19.3	3.75	15.1	**1FL2205-4AF ■ 1 - ■ ■ B 0**	1.28	5.1	5.98		5	6.1

Brake	
Without	**0**
Holding brake	**1**
Degree of protection	
IP54	**0**
IP65 (with shaft sealing ring)	**1**
Shaft end, feather key	
Plain shaft	**0**
Shaft with feather key (half-key balancing)	**1**
Encoder	
Absolute encoder 17-bit singleturn	**H**
Absolute encoder 21-bit singleturn	**S**
Absolute encoder 21-bit singleturn + 12-bit multiturn	**M**
Connection technology	
Metal circular connector	**B**
Metal hybrid connector	**C**

In addition, the Siemens Product Configurator can be used on the internet: www.siemens.com/sinamics-s200/configuration

[1] Rated torque, rated power and maximum torque listed in the table above allow for a production tolerance of 10 %.

[2] Motor weight with absolute encoder 17-bit singleturn.

© Siemens 2025

	MOTION-CONNECT connection systems (continued) – Further info in section "MOTION-CONNECT 350 and 380 connection systems".						
	Pre-assembled cables for communication		**Connectors**				
	SINAMICS S200 – Brake on the 1FL2 servomotor with holding brake		Drive end (DE) direction	Non drive end (NDE) direction	Motor side		
	No. of cores × cross-section mm²	Article No.	for hybrid connection Article No.	for hybrid connection Article No.	for power connection Article No.	for encoder connection Article No.	for brake Article No.
	MOTION-CONNECT connection systems (continued)						
	–	–	**6FX2003-3HD00**	**6FX2003-3HN00**	–	–	–
	–	–	**6FX2003-3HD00**	**6FX2003-3HN00**	–	–	–
	–	–	**6FX2003-3HD00**	**6FX2003-3HN00**	–	–	–
	–	–	**6FX2003-3HD00**	**6FX2003-3HN00**	–	–	–
	–	–	–	–	**6FX2003-0LL63**	**6FX2003-0DB63**	– (in power connector)

MOTION-CONNECT connectors for SINAMICS S200 servo converters				
Crimp contacts "power and PE" (2000 pieces per reel) for hybrid connection	Crimp contacts "signal and brake" (2000 pieces per reel) for hybrid connection	Connectors converter side		
		for power connection	IX signal connector, C coded for encoder connection	for brake
6FX2003-7HP00	**6FX2003-7HS00**	–	**6FX2003-0DE61**	–

© Siemens 2025

Selection and ordering data

SIMOTICS S-1FL2 servomotors – Further info in section "SIMOTICS S-1FL2 servomotors".

Max. speed	Rated power [1]	Static torque	Rated torque [1]	Max. torque [1]	Rated current	Max. current		Torque constant	Moment of inertia of rotor		Recommended load to motor inertia ratio, max.	Weight [2]	
$n_{max.}$	P_N at ΔT=100 K	M_0 at ΔT=100 K	M_N at ΔT=100 K	M_{max}	I_N at ΔT=100 K	I_{max}			$J_{without\ brake}$	$J_{with\ brake}$		$m_{without\ brake}$	$m_{with\ brake}$
r/min	kW (hp)	Nm	Nm	Nm	A	A	Article No.	Nm/A	kg cm²	kg cm²		kg	kg
SIMOTICS S-1FL2 High Inertia servomotors – For smooth operational performance													
Shaft height 45 – Rated speed n_N 3000 r/min – Line voltage 380 ... 480 V 3 AC													
4000	0.40 (0.54)	1.45	1.27	4.445	1.2	4.2	**1FL2304-2AF ■ 1 - ■ ■ B 0**	1.12	2.69	3.05	10×	3.5	4.9
4000	0.75 (1.02)	3.02	2.39	8.365	2.1	7.3	**1FL2304-4AF ■ 1 - ■ ■ B 0**	1.21	5.18	5.54		5.4	6.8
Shaft height 65 – Rated speed n_N 2000 r/min – Line voltage 380 ... 480 V 3 AC													
3000	0.75 (1.02)	3.7	3.58	12	2.5	8.4	**1FL2306-1AC ■ 1 - ■ ■ B 0**	1.48	7.962	9.57	10×	5.9	8.9
3000	1.00 (1.36)	5	4.78	17	3	10.7	**1FL2306-2AC ■ 1 - ■ ■ B 0**	1.67	11.65	13.26	5×	7.3	10.3
3000	1.50 (2.04)	8	7.16	22	4.6	14.1	**1FL2306-4AC ■ 1 - ■ ■ B 0**	1.63	15.287	16.9		8.6	11.6
3000	1.75 (2.38)	8.8	8.4	30	5.3	19	**1FL2306-6AC ■ 1 - ■ ■ B 0**	1.66	22.612	24.22		11.1	14.1
3000	2.00 (2.72)	13.3	9.6	33.425	5.9	20.7	**1FL2306-7AC ■ 1 - ■ ■ B 0**	1.71	29.938	31.55		13.7	16.7
Shaft height 90 – Rated speed n_N 2000 r/min – Line voltage 380 ... 480 V 3 AC													
3000	2.50 (3.40)	12.6	11.9	37.5	7.8	25.2	**1FL2310-0AC ■ 1 - ■ ■ B 0**	1.62	47.409	56.78	5×	15.4	21.4
3000	3.50 (4.76)	18.1	16.7	55	11	36.2	**1FL2310-2AC ■ 1 - ■ ■ B 0**	1.65	69.095	78.47		19.4	25.4
2500	5.00 (6.80)	25.2	23.9	70	12.6	36.9	**1FL2310-4AC ■ 1 - ■ ■ B 0**	2	90.827	100.2		23.7	29.7
2000	7.00 (9.52)	35.2	33.4	90	13.2	35.6	**1FL2310-6AC ■ 1 - ■ ■ B 0**	2.67	134.292	143.66		31.9	37.9

Brake	
Without	0
Holding brake	1
Degree of protection	
IP54	0
IP65 (with shaft sealing ring)	1
Shaft end, feather key	
Plain shaft	0
Shaft with feather key (half-key balancing)	1
Encoder	
Absolute encoder 17-bit singleturn	H
Absolute encoder 21-bit singleturn	S
Absolute encoder 21-bit singleturn + 12-bit multiturn	M
Connection technology	
Metal circular connector	B
Metal hybrid connector	C

In addition, the Siemens Product Configurator can be used on the internet: www.siemens.com/sinamics-s200/configuration

[1] Rated torque, rated power and maximum torque listed in the table above allow for a production tolerance of 10 %.

[2] Motor weight with absolute encoder 17-bit singleturn.

© Siemens 2025

	SINAMICS S200 servo converters Further info in section "SINAMICS S200 servo converters".			Line filter			Recommended standard fuse More information at www.siemens.com/sinamics-s200/ocpd				Recommended circuit breaker
	Max. motor power		Frame size	With one of the recommended line filters, IEC 61800-3 category C2 can be reached in combination with SINAMICS S200 for motor cable lengths up to 30 m (98.5 ft).			IEC-compliant		UL/cUL-compliant		IEC/UL/cUL-compliant
				Line voltage	I_N		I	3NA3	I	Fuse type	3RV2
	kW (hp)	Article No.		V	A	Article No.	A	Article No.	A	Class	Article No.
	SINAMICS S200 servo converters										
	Line voltage 380 ... 480 V 3 AC										
	0.40 (0.54)	**6SL5 5 10-1BE10-4A ■ 0**	FSA	3 AC 380 ... 480	5	**6SL5550-0XE20-5CA0**	4	**3NA3804**	3	J	**3RV2011-1DA10**
	0.75 (1.02)	**6SL5 5 10-1BE10-8A ■ 0**	FSB				10	**3NA3803**	10		**3RV2011-1EA10**
	Line voltage 380 ... 480 V 3 AC										
	0.75 (1.02)	**6SL5 5 10-1BE10-8A ■ 0**	FSB	3 AC 380 ... 480	5	**6SL5550-0XE20-5CA0**	10	**3NA3803**	10	J	**3RV2011-1EA10**
	1.00 (1.36)	**6SL5 5 10-1BE11-0A ■ 0**									**3RV2011-1FA10**
	1.75 (2.38)	**6SL5 5 10-1BE11-5A ■ 0**	FSC	3 AC 380 ... 480	12	**6SL5550-0XE21-2CA0**	16	**3NA3805**	15		**3RV2011-4AA10**
	2.50 (3.40)	**6SL5 5 10-1BE12-5A ■ 0**									**3RV2011-4AA10**
	Line voltage 380 ... 480 V 3 AC										
	2.50 (3.40)	**6SL5 5 10-1BE12-5A ■ 0**	FSC	3 AC 380 ... 480	12	**6SL5550-0XE21-2CA0**	16	**3NA3805**	20	J	**3RV2011-4AA10**
	3.50 (4.76)	**6SL5 5 10-1BE13-5A ■ 0**	FSD	3 AC 380 ... 480	20	**6SL5550-0XE22-0CA0**	20	**3NA3807**	25		**3RV2021-4BA10**
	5.00 (6.80)	**6SL5 5 10-1BE15-0A ■ 0**									**3RV2021-4BA10**
	7.00 (9.52)	**6SL5 5 10-1BE17-0A ■ 0**					25	**3NA3810**			**3RV2021-4DA10**

Servo converter	
SINAMICS S200	**5**
SINAMICS S200 Basic	**6**
Version	
Pulse Train Input (PTI)	**A**
PROFINET (PN)	**F**

© Siemens 2025

Selection and ordering data

SIMOTICS S-1FL2 servomotors – Further info in section "SIMOTICS S-1FL2 servomotors".

Max. speed $n_{max.}$ r/min	Rated power [1] P_N at ΔT=100 K kW (hp)	Static torque M_0 at ΔT=100 K Nm	Rated torque [1] M_N at ΔT=100 K Nm	Max. torque [1] M_{max} Nm	Rated current I_N at ΔT=100 K A	Max. current I_{max} A	Article No.	Torque constant Nm/A	Moment of inertia of rotor $J_{without\ brake}$ kg cm²	$J_{with\ brake}$ kg cm²	Recommended load to motor inertia ratio, max.	Weight [2] $m_{without\ brake}$ kg	$m_{with\ brake}$ kg
SIMOTICS S-1FL2 High Inertia servomotors – For smooth operational performance													
Shaft height 45 – Rated speed n_N 3000 r/min – Line voltage 380 ... 480 V 3 AC													
4000	0.40 (0.54)	1.45	1.27	4.445	1.2	4.2	**1FL2304-2AF ■ 1 - ■ ■ B 0**	1.12	2.69	3.05	10×	3.5	4.9
4000	0.75 (1.02)	3.02	2.39	8.365	2.1	7.3	**1FL2304-4AF ■ 1 - ■ ■ B 0**	1.21	5.18	5.54		5.4	6.8
Shaft height 65 – Rated speed n_N 2000 r/min – Line voltage 380 ... 480 V 3 AC													
3000	0.75 (1.02)	3.7	3.58	12	2.5	8.4	**1FL2306-1AC ■ 1 - ■ ■ B 0**	1.48	7.962	9.57	10×	5.9	8.9
3000	1.00(1.36)	5	4.78	17	3	10.7	**1FL2306-2AC ■ 1 - ■ ■ B 0**	1.67	11.65	13.26	5×	7.3	10.3
3000	1.50 (2.04)	8	7.16	22	4.6	14.1	**1FL2306-4AC ■ 1 - ■ ■ B 0**	1.63	15.287	16.9		8.6	11.6
3000	1.75 (2.38)	8.8	8.4	30	5.3	19	**1FL2306-6AC ■ 1 - ■ ■ B 0**	1.66	22.612	24.22		11.1	14.1
3000	2.00 (2.72)	13.3	9.6	33.425	5.9	20.7	**1FL2306-7AC ■ 1 - ■ ■ B 0**	1.71	29.938	31.55		13.7	16.7
Shaft height 90 – Rated speed n_N 2000 r/min – Line voltage 380 ... 480 V 3 AC													
3000	2.50 (3.40)	12.6	11.9	37.5	7.8	25.2	**1FL2310-0AC ■ 1 - ■ ■ B 0**	1.62	47.409	56.78	5×	15.4	21.4
3000	3.50 (4.76)	18.1	16.7	55	11	36.2	**1FL2310-2AC ■ 1 - ■ ■ B 0**	1.65	69.095	78.47		19.4	25.4
2500	5.00 (6.80)	25.2	23.9	70	12.6	36.9	**1FL2310-4AC ■ 1 - ■ ■ B 0**	2	90.827	100.2		23.7	29.7
2000	7.00 (9.52)	35.2	33.4	90	13.2	35.6	**1FL2310-6AC ■ 1 - ■ ■ B 0**	2.67	134.292	143.66		31.9	37.9

Brake					
Without	0				
Holding brake	1				
Degree of protection					
IP54		0			
IP65 (with shaft sealing ring)		1			
Shaft end, feather key					
Plain shaft			0		
Shaft with feather key (half-key balancing)			1		
Encoder					
Absolute encoder 17-bit singleturn				H	
Absolute encoder 21-bit singleturn				S	
Absolute encoder 21-bit singleturn + 12-bit multiturn				M	
Connection technology					
Metal circular connector					B
Metal hybrid connector					C

In addition, the Siemens Product Configurator can be used on the internet: www.siemens.com/sinamics-s200/configuration

[1] Rated torque, rated power and maximum torque listed in the table above allow for a production tolerance of 10 %.

[2] Motor weight with absolute encoder 17-bit singleturn.

© Siemens 2025

	MOTION-CONNECT connection systems – Further info in section "MOTION-CONNECT 350 and 380 connection systems".					
	Pre-assembled dual cables for power and communication		**Pre-assembled power cables**		**Pre-assembled cables for communication**	
					SINAMICS S200 – Absolute encoder on the 1FL2 servomotor	
	No. of cores × cross-section mm²	Article No.	No. of cores × cross-section mm²	Article No.	No. of cores × cross-section mm²	Article No.
	MOTION-CONNECT connection systems					
	–	–	4 × 0.75	**6FX3 ■ 02-5 C L01-1 ■ ■0**	3 × 2 × 0.25 [1]	**6FX3 ■02-2XB12-1 ■ ■0**
	–	–	4 × 0.75	**6FX3 ■ 02-5 C L01-1 ■ ■0**	3 × 2 × 0.25 [1]	**6FX3 ■02-2XB12-1 ■ ■0**
	–	–	4 × 1.5	**6FX3 ■ 02-5 C L02-1 ■ ■0**	3 × 2 × 0.25 [1]	**6FX3 ■02-2XB12-1 ■ ■0**
			4 × 2.5	**6FX3 ■ 02-5 C L12-1 ■ ■0**		

Connection system														
MOTION-CONNECT 350							**5**						**5**	
MOTION-CONNECT 380							**8**						**8**	
Brake cores														
Without									**C**					
With									**D**					
Length														
3 m						**A**		**D**						**A**	**D**
5 m						**A**		**F**						**A**	**F**
7 m						**A**		**H**						**A**	**H**
10 m						**B**		**A**						**B**	**A**
15 m						**B**		**F**						**B**	**F**
20 m						**C**		**A**						**C**	**A**
30 m						**D**		**A**						**D**	**A**

[1] No. of cores × cross-section for encoder cable in mm² for:
Length <20 m: 3 x 2 x 0.25
Length ≥ 20 m: 2 x 2 x 0.25 + 2 x 0.38

© Siemens 2025

Selection and ordering data

SIMOTICS S-1FL2 servomotors – Further info in section "SIMOTICS S-1FL2 servomotors".

Max. speed $n_{max.}$ r/min	Rated power [1] P_N at ΔT=100 K kW (hp)	Static torque M_0 at ΔT=100 K Nm	Rated torque [1] M_N at ΔT=100 K Nm	Max. torque [1] M_{max} Nm	Rated current I_N at ΔT=100 K A	Max. current I_{max} A	Article No.	Torque constant Nm/A	Moment of inertia of rotor $J_{without\ brake}$ kg cm²	$J_{with\ brake}$ kg cm²	Recommended load to motor inertia ratio, max.	Weight [2] $m_{without\ brake}$ kg	$m_{with\ brake}$ kg
SIMOTICS S-1FL2 High Inertia servomotors – For smooth operational performance													
Shaft height 45 – Rated speed n_N 3000 r/min – Line voltage 380 ... 480 V 3 AC													
4000	0.40 (0.54)	1.45	1.27	4.445	1.2	4.2	**1FL2304-2AF ■ 1 - ■ ■ B 0**	1.12	2.69	3.05	10×	3.5	4.9
4000	0.75 (1.02)	3.02	2.39	8.365	2.1	7.3	**1FL2304-4AF ■ 1 - ■ ■ B 0**	1.21	5.18	5.54		5.4	6.8
Shaft height 65 – Rated speed n_N 2000 r/min – Line voltage 380 ... 480 V 3 AC													
3000	0.75 (1.02)	3.7	3.58	12	2.5	8.4	**1FL2306-1AC ■ 1 - ■ ■ B 0**	1.48	7.962	9.57	10×	5.9	8.9
3000	1.00 (1.36)	5	4.78	17	3	10.7	**1FL2306-2AC ■ 1 - ■ ■ B 0**	1.67	11.65	13.26	5×	7.3	10.3
3000	1.50 (2.04)	8	7.16	22	4.6	14.1	**1FL2306-4AC ■ 1 - ■ ■ B 0**	1.63	15.287	16.9		8.6	11.6
3000	1.75 (2.38)	8.8	8.4	30	5.3	19	**1FL2306-6AC ■ 1 - ■ ■ B 0**	1.66	22.612	24.22		11.1	14.1
3000	2 (2.72)	13.3	9.6	33.425	5.9	20.7	**1FL2306-7AC ■ 1 - ■ ■ B 0**	1.71	29.938	31.55		13.7	16.7
Shaft height 90 – Rated speed n_N 2000 r/min – Line voltage 380 ... 480 V 3 AC													
3000	2.50 (3.40)	12.6	11.9	37.5	7.8	25.2	**1FL2310-0AC ■ 1 - ■ ■ B 0**	1.62	47.409	56.78	5×	15.4	21.4
3000	3.50 (4.76)	18.1	16.7	55	11	36.2	**1FL2310-2AC ■ 1 - ■ ■ B 0**	1.65	69.095	78.47		19.4	25.4
2500	5.00 (6.80)	25.2	23.9	70	12.6	36.9	**1FL2310-4AC ■ 1 - ■ ■ B 0**	2	90.827	100.2		23.7	29.7
2000	7.00 (9.52)	35.2	33.4	90	13.2	35.6	**1FL2310-6AC ■ 1 - ■ ■ B 0**	2.67	134.292	143.66		31.9	37.9

Brake					
Without	0				
Holding brake	1				
Degree of protection					
IP54		0			
IP65 (with shaft sealing ring)		1			
Shaft end, feather key					
Plain shaft			0		
Shaft with feather key (half-key balancing)			1		
Encoder					
Absolute encoder 17-bit singleturn				H	
Absolute encoder 21-bit singleturn				S	
Absolute encoder 21-bit singleturn + 12-bit multiturn				M	
Connection technology					
Metal circular connector					B
Metal hybrid connector					C

In addition, the Siemens Product Configurator can be used on the internet: www.siemens.com/sinamics-s200/configuration

[1] Rated torque, rated power and maximum torque listed in the table above allow for a production tolerance of 10 %.

[2] Motor weight with absolute encoder 17-bit singleturn.

© Siemens 2025

	MOTION-CONNECT connection systems (continued) – Further info in section "MOTION-CONNECT 350 and 380 connection systems".						
	Pre-assembled cables for communication		**Connectors**				
	SINAMICS S200 – Brake on the 1FL2 servomotor with holding brake		Drive end (DE) direction	Non drive end (NDE) direction	Motor side		
	No. of cores × cross-section mm²	Article No.	for hybrid connection Article No.	for hybrid connection Article No.	for power connection Article No.	for encoder connection Article No.	for brake Article No.
	MOTION-CONNECT connection systems (continued)						
	2 × 0.75	**6FX3 ■02-5BL03-1 ■ ■ 0**	–	–	**6FX2003-0LL13**	**6FX2003-0DB13**	**6FX2003-0LL53**
	2 × 0.75	**6FX3 ■02-5BL03-1 ■ ■ 0**	–	–	**6FX2003-0LL13**	**6FX2003-0DB13**	**6FX2003-0LL53**
	2 × 0.75	**6FX3 ■02-5BL03-1 ■ ■ 0**	–	–	**6FX2003-0LL13**	**6FX2003-0DB13**	**6FX2003-0LL53**

Connection system			
MOTION-CONNECT 350	**5**		
MOTION-CONNECT 380	**8**		
Length			
3 m		**A**	**D**
5 m		**A**	**F**
7 m		**A**	**H**
10 m		**B**	**A**
15 m		**B**	**F**
20 m		**C**	**A**
30 m		**D**	**A**

MOTION-CONNECT connectors for SINAMICS S200 servo converters		
Connectors converter side		
for power connection	IX signal connector, C coded for encoder connection	for brake
–	**6FX2003-0DE61**	–

© Siemens 2025

Accessories

Accessories for SINAMICS S200 Basic and SINAMICS S200 servo converters

Description	Article No.
SINAMICS SD card 8 GB Parameter assignments, firmware and licenses for a converter can be stored on the memory card.	
• Empty	**6SL5970-0AA00-0AA0**
• With firmware V6.2	**6SL5570-0GC00-0AA0**
• With firmware V6.3	**6SL5570-0GD00-0AA0**
• With firmware V6.4	**6SL5570-0GE00-0AA0**
• With firmware V6.4 and SINAMICS OPC UA Single Extended license [1]	**6SL5570-0GE00-0AA0-Z H80**
SINAMICS UPC UA Single Extended license for SINAMICS S200 [1] • Certificate of License (CoL) in electronic form	**6SL5977-0AA00-1GA0**
SINAMICS SDI Pro 5.5" NEW Powerful and user-friendly operator panel for the next generation of SINAMICS converters SINAMICS S200, SINAMICS S210 (6SL5...) and SINAMICS G220	**6SL4950-0AH35-2AA0**
SINAMICS Smart Adapter Wi-Fi solution for the next generation of SINAMICS converters SINAMICS S200, SINAMICS S210 (6SL5...) and SINAMICS G220	**6SL4950-0AJ00-0AA0**
Connecting cables and connectors for SIMATIC S7 controller and SINAMICS S200 Basic / SINAMICS S200, Pulse Train Input version (PTI)	
Connector for setpoint cable 50-pin MDR connector	**6SL3260-2NA00-0VA0**
Setpoint cable with connector MDR 50-pin connector, free pins to controller side, length: 1 m	**6SL3260-4NA00-1VB0**
Setpoint cable with connectors on both sides and separate terminal block MDR 50-pin connector, terminal block to controller side, length: 0.5 m	**6SL5562-0XX00-0AD0**
Connecting cables and connectors for SIMATIC S7 controller and SINAMICS S200 Basic / SINAMICS S200, PROFINET version	
PROFINET I/O connector 20-pin	**6SL3260-2MA00-0VA0**
PROFINET I/O cable with 20-pin MDR connector, length: 1 m (3.28 ft)	**6SL5562-1XX00-0AC0**
PROFINET I/O adapter for 20-pin MDR connector	**6SL5562-1XX00-0AD0**
Pre-assembled PROFINET cable with two RJ45 180° plugs, length: 1 m (3.28 ft)	**6XV1871-5BH10**
RJ45 data plug-in connector with 180° (straight) cable outlet	**6GK1901-1BB10-2AA0**
Standard PROFINET cable 4-core, sold by the meter, not assembled	**6XV1840-2AH10**
PROFINET patch cable For the networking of concatenated converters Industrial Ethernet TP cord, CAT 6 A, twisted pair line 4 × 2 cores, pre-assembled with two RJ45 connectors	
• 0.3 m (0.98 ft)	**6XV1870-3QE30**
• 0.5 m (1.64 ft)	**6XV1870-3QE50**

For further information about PROFINET cables refer on the internet at: www.siemens.com/simatic-net

Recommended SIMATIC S7 controller

More information about SIMATIC S7-1500 and SIMATIC S7-1500 T-CPU controllers is available in Catalog ST 70 and on the internet at: www.siemens.com/simatic-s7-1500

Spare parts for SINAMICS S200 Basic and SINAMICS S200 servo converters

Description	Article No.
Shield connection kit including several shield plates and fixing screws	**6SL5566-0AB00-0AA0**
Terminal kits	
• for SINAMICS S200	**6SL5568-0XX00-0AA0**
• for SINAMICS S200 Basic	**6SL5668-0XX00-0AA0**
Replacement fans	
• for SINAMICS S200, 400 V version, FSC	**6SL5560-0CE00-0AA0**
• for SINAMICS S200, 400 V version, FSD	**6SL5560-0DE00-0AA0**

Starter kit

Description	Article No.
SINAMICS S200 starter kit **PROFINET version** Scope of delivery: • SINAMICS S200 servo converter, PROFINET version, 200 V, 400 W • SIMOTICS S-1FL2 Low Inertia servomotor, shaft height 30, 400 W, IP65 degree of protection, without holding brake, shaft with feather key, with absolute encoder 21-bit singleturn • Pre-assembled dual motor connection cable, drive end, 3 m (9.84 ft) • Pre-assembled PROFINET I/O cable, 1 m (3.28 ft) The delivery quantity is limited to three units per customer.	**6SL5990-0AE50-0AA0**

Training cases

Description	Article No.
SINAMICS S200 training case **PROFINET version** Scope of delivery: • 2 × SINAMICS S200 servo converter, PROFINET version, 200 V, 100 W • 1 × SIMOTICS S-1FL2 Low Inertia servomotor, absolute encoder 21-bit singleturn • 1 × SIMOTICS S-1FL2 Low Inertia servomotor, absolute encoder 21-bit singleturn + 12-bit multiturn • 2 × Pre-assembled dual motor connection cable • Rail, prepared for installation of a controller, e.g. SIMATIC S7-1500 (controller not included in scope of delivery) • SIMATIC ET 200SP, PROFINET Interface Module The SINAMICS S200 training case is supplied as a trolley with a hood.	**6AG1067-1AA42-0AA0**
SINAMICS S200 training case **Pulse Train Input version (PTI)** Scope of delivery: • 1 × SINAMICS S200 servo converter, Pulse Train Input version (PTI), 200 V, 100 W • 1 × SIMOTICS S-1FL2 Low Inertia servomotor, absolute encoder 21-bit singleturn + 12-bit multiturn • 1 × Pre-assembled dual motor connection cable • 1 × SIMATIC S7-1200, compact CPU, CPU 1211C, DC/DC/DC • 1 × SIMATIC S7-1200, Communication Board CB 1241, RS485 The SINAMICS S200 training case Pulse Train Input version (PTI) is supplied as a trolley with a hood.	**6AG1067-1AA43-0AA0**

[1] OPC UA server with information model for inventory management and process data acquisition will be available soon with an V6.4 HF.

© Siemens 2025

More information

Identification link according to IEC 61406 for SINAMICS S200

The ID link contains the article and serial number of the product. As a QR code, it replaces the previous data matrix code on the nameplate and takes you with the URL directly to a product information page on the internet with access to the technical documentation, data sheet, certificates, FAQs, product notifications, and catalogs. Paper package inserts become superfluous since the information is available electronically directly via the QR code, even years later. In this way, we are making a valuable contribution to the preservation of our environment. You don't need an additional app. Simply scan the QR code with your smartphone or tablet. According to IEC 61406, the QR code of an ID link is marked with a frame and a triangle at the bottom right. With their globally unique identifiers, Siemens products are ready for Industry 4.0.

The ID serves as a connection to the administration shell with which modules of the digital twin can be provided.

Further documentation, such as the operating instructions, is available free on the internet at:
www.siemens.com/sinamics-s200/documentation

Detailed information on the SINAMICS S200 drive system, including the latest technical documentation (brochures, tutorials, dimensional drawings, certificates, manuals and operating instructions), is available on the internet at:
www.siemens.com/sinamics-s200

and is also available via the Siemens Product Configurator on the internet.
The Siemens Product Configurator can be found in SiePortal at the following address:
www.siemens.com/sinamics-s200/configuration

SINAMICS S200 starter kit

Selection and ordering data

Description	Article No.
SINAMICS S200 starter kit **PROFINET version** Scope of delivery: • SINAMICS S200 servo converter, PROFINET version, 200 V, 400 W • SIMOTICS S-1FL2 Low Inertia servomotor, shaft height 30, 400 W, IP65 degree of protection, without holding brake, shaft with feather key, with absolute encoder 21-bit singleturn • Pre-assembled dual motor connection cable, drive end, 3 m (9.84 ft) • Pre-assembled PROFINET I/O cable, 1 m (3.28 ft) The delivery quantity is limited to three units per customer.	**6SL5990-0AE50-0AA0**

© Siemens 2025

Selection and ordering data

Recommended controller for SINAMICS S200 pulse train (PTI) version

SIMATIC S7-1200 Basic Controller for SINAMICS S200 pulse train (PTI) version							
Compact CPU expandable with			Digital outputs	of which high-speed outputs (Pulse Train Output)	Work memory	CPU	
Signal board or communication board	Communication modules	Signal Modules					Article No.
1	3	–	4	4 (100 kHz)	50 KB	CPU 1211C DC/DC/DC	**6ES7211-1AE40-0XB0**
		2	6	4 (100 kHz)	75 KB	CPU 1212C DC/DC/DC	**6ES7212-1AE40-0XB0**
		8	10	4 (100 kHz)	100 KB	CPU 1214C DC/DC/DC	**6ES7214-1AG40-0XB0**
					125 KB	CPU 1215C DC/DC/DC	**6ES7215-1AG40-0XB0**
				4 (1 MHz)	150 KB	CPU 1217C DC/DC/DC	**6ES7217-1AG40-0XB0**

One SIMATIC S7-1200 CPU can control up to 4 SINAMICS S200 axes. Each axis requires 2 high-speed digital outputs for the pulse train interface. The SIMATIC S7-1500 compact CPUs can also be connected to SINAMICS S200 via “pulse train”.

Expansion for control of more than 2 axes			
Signal boards, 0.1 A, 200 kHz, can be plugged directly into the CPU. One axis requires 2 high-speed digital outputs for controlling.			
Digital outputs	Input voltage	Type	Article No.
2	5 V DC	SB 1223	**6ES7223-3AD30-0XB0**
	24 V DC		**6ES7223-3BD30-0XB0**
4	5 V DC	SB 1222	**6ES7222-1AD30-0XB0**
	24 V DC		**6ES7222-1BD30-0XB0**

Recommended controller for SINAMICS S200 PROFINET (PN) version

Version	Integrated interfaces			CPU Processing times for bit operations	Max. number of axes	Work memory	CPU	
	PROFINET IO IRT	PROFINET	PROFIBUS DP					Article No.
SIMATIC S7-1200 Basic Controller for SINAMICS S200 PROFINET (PN) version								
Standard CPUs	1 × PN IO	–	–	85 ns	2	50 KB	CPU 1211C DC/DC/DC	**6ES7211-1AE40-0XB0**
		–	–	85 ns	2	75 KB	CPU 1212C DC/DC/DC	**6ES7212-1AE40-0XB0**
		–	–	85 ns	2	100 KB	CPU 1214C DC/DC/DC	**6ES7214-1AG40-0XB0**
	1 × PN IO	–	–	85 ns	2	125 KB	CPU 1215C DC/DC/DC	**6ES7215-1AG40-0XB0**
	(2-port switch)	–	–	85 ns	2	150 KB	CPU 1217C DC/DC/DC	**6ES7217-1AG40-0XB0**
SIMATIC S7-1500 Advanced Controller for SINAMICS S200 PROFINET (PN) version								
Standard CPUs	1 × PN IO IRT	–	–	60 ns	10	150 KB	CPU 1511-1 PN	**6ES7511-1AK02-0AB0**
	(2-port switch)	–	–	40 ns	10	300 KB	CPU 1513-1 PN	**6ES7513-1AL02-0AB0**
		1 × PN	–	30 ns	30	500 KB	CPU 1515-2 PN	**6ES7515-2AM02-0AB0**
		1 × PN	1 × DP	10 ns	30	1 MB	CPU 1516-3 PN/DP	**6ES7516-3AN02-0AB0**
		1 × PN	1 × DP	2 ns	96	2 MB	CPU 1517-3 PN/DP	**6ES7517-3AP00-0AB0**
		2 × PN	1 × DP	1 ns	128	4 MB	CPU 1518-4 PN/DP	**6ES7518-4AP00-0AB0**
Compact CPUs	1 × PN IO IRT	–	–	60 ns	10	175 KB	CPU 1511C-1 PN	**6ES7511-1CK01-0AB0**
	(2-port switch)	–	–	48 ns	10	250 KB	CPU 1512C-1 PN	**6ES7512-1CK01-0AB0**
Technology CPUs	1 × PN IO IRT	–	–	60 ns	10	225 KB	CPU 1511T-1 PN	**6ES7511-1TK01-0AB0**
	(2-port switch)	1 × PN	–	30 ns	30	750 KB	CPU 1515T-2 PN	**6ES7515-2TM01-0AB0**
		1 × PN	1 × DP	10 ns	80	1.5 MB	CPU 1516T-3 PN/DP	**6ES7516-3TN00-0AB0**
		1 × PN	1 × DP	2 ns	128	3 MB	CPU 1517T-3 PN/DP	**6ES7517-3TP00-0AB0**
		2 × PN	1 × DP	1 ns	192	9 MB	CPU 1518T-4 PN/DP	**6ES7518-4TP00-0AB0**
Fail-safe CPUs	1 × PN IO IRT	–	–	60 ns	10	225 KB	CPU 1511F-1 PN	**6ES7511-1FK02-0AB0**
	(2-port switch)	–	–	40 ns	10	450 KB	CPU 1513F-1 PN	**6ES7513-1FL02-0AB0**
		1 × PN	–	30 ns	30	750 KB	CPU 1515F-2 PN	**6ES7515-2FM02-0AB0**
		1 × PN	1 × DP	10 ns	30	1.5 MB	CPU 1516F-3 PN/DP	**6ES7516-3FN02-0AB0**
		1 × PN	1 × DP	2 ns	96	3 MB	CPU 1517F-3 PN/DP	**6ES7517-3FP00-0AB0**
		2 × PN	1 × DP	1 ns	128	6 MB	CPU 1518F-4 PN/DP	**6ES7518-4FP00-0AB0**
Fail-safe Technology CPUs	1 × PN IO IRT	–	–	60 ns	10	225 KB	CPU 1511TF-1 PN	**6ES7511-1UK01-0AB0**
	(2-port switch)	1 × PN	–	30 ns	14	750 KB	CPU 1515TF-2 PN	**6ES7515-2UM01-0AB0**
		1 × PN	1 × DP	10 ns	80	1.5 MB	CPU 1516TF-3 PN/DP	**6ES7516-3UN00-0AB0**
		1 × PN	1 × DP	2 ns	128	3 MB	CPU 1517TF-3 PN/DP	**6ES7517-3UP00-0AB0**
		2 × PN	1 × DP	1 ns	192	9 MB	CPU 1518TF-4 PN/DP	**6ES7518-4UP00-0AB0**

For SINAMICS S200 PROFINET (PN) version, the AC/DC/RLY and DC/DC/RLY versions of SIMATIC S7-1200 are also possible (CPU 1211C, CPU 1212C, CPU 1214C and CPU 1215C).

SINAMICS S200 as a PROFINET I/O device with PROFIdrive supports technology objects and function blocks of SIMATIC S7-1200, SIMATIC S7-1500 and SIMATIC S7-1500 Technology CPU for speed and positioning control.

For further information about SIMATIC controllers please refer to Catalog ST 70 or to web page:
www.siemens.com/simatic-controller

© Siemens 2025

2/2 SINAMICS S200 Basic servo converters
2/2 Overview
2/3 Design
2/5 Function
2/6 Integration
2/8 Selection and ordering data
2/10 Technical specifications
2/12 Dimensional drawings
2/13 More info

2/14 SINAMICS S200 servo converters
2/14 Overview
2/15 Design
2/17 Function
2/18 Integration
2/20 Selection and ordering data
2/22 Technical specifications
2/25 Dimensional drawings
2/26 More info

2/27 Line-side components
2/27 Line filters
2/27 Overview
2/27 Selection and ordering data
2/27 Technical specifications
2/28 More info
2/29 Recommended line-side overcurrent protection devices
2/29 Overview
2/29 Selection and ordering data

2/30 DC link components
2/30 External braking resistors
2/30 Overview

2/31 Connecting cables for SIMATIC S7 controllers
2/31 Selection and ordering data

2/32 Supplementary system components
2/32 Memory cards
2/33 SINAMICS SDI Pro 5.5"
2/38 SINAMICS Smart Adapter

2/40 Spare parts
2/40 Shield connection kit
2/40 Terminal kits
2/40 Replacement fans

For **selection and ordering data** please also refer to section "System overview" "SINAMICS S200 servo drive system" from page 1/16.

Detailed technical information on SINAMICS S200 is available on the internet at: www.siemens.com/sinamics-s200/documentation

In addition, the Siemens Product Configurator can be used on the internet at the following address: www.siemens.com/sinamics-s200/configuration

© Siemens 2025

Overview

SINAMICS S200 Basic servo converters

SINAMICS S200 Basic servo converters, 200 ... 240 V 1 AC / 3 AC, Pulse Train Input version (PTI), frame sizes FSA, FSB and FSC

SINAMICS S200 Basic servo converters, 200 ... 240 V 1 AC / 3 AC, PROFINET version, frame sizes FSA, FSB and FSC

The SINAMICS S200 servo converters consist of a basic version and a standard version with pulse train input position control (PTI) or PROFINET RT/IRT (PN) to meet various needs of applications and works perfectly together with SIMATIC controllers. With the SINAMICS S200, the PROFINET function "Dynamic Frame Packing" (DFP) is available, which enables the connection of large numbers of axes to a SIMATIC controller.

- SINAMICS S200 Basic servo converters, power range 0.1 to 1 kW at 200 ... 240 V 1 AC / 3 AC
- SINAMICS S200 servo converters, power range 0.1 to 1 kW at 200 ... 240 V 1 AC / 3 AC and 0.2 to 7 kW at 380 ... 480 V 3 AC

© Siemens 2025

Design

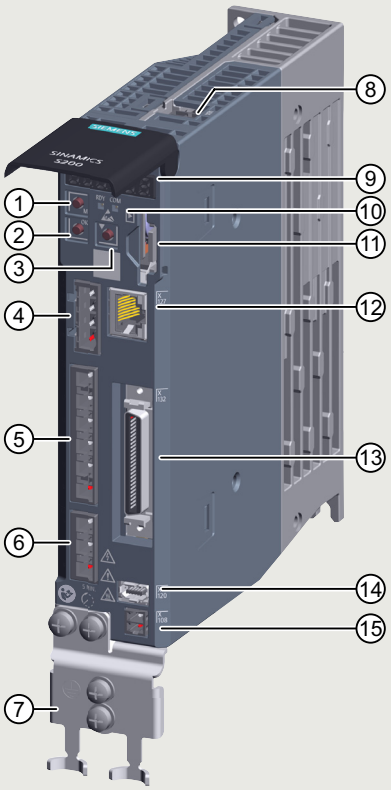

1. M button
2. OK button
3. DOWN button
4. 24 V DC power supply - X124
5. Mains and braking resistor interface - X1
6. Motor power interface - X2
7. Shield plate
8. STO interface - X131 [1)]
9. 6-digit display
10. LED status indicators
11. Memory card slot
12. Service interface (Ethernet) - X127
13. Control/status inputs and outputs - X132
14. Encoder interface - X120
15. Motor holding brake interface - X108 [1)]

[1)] The interfaces X131 and X108 are only available on the SINAMICS S200 converters, not on the SINAMICS S200 Basic converters.

Interface overview SINAMICS S200 Basic servo converters, Pulse Train Input version (PTI)

© Siemens 2025

Design

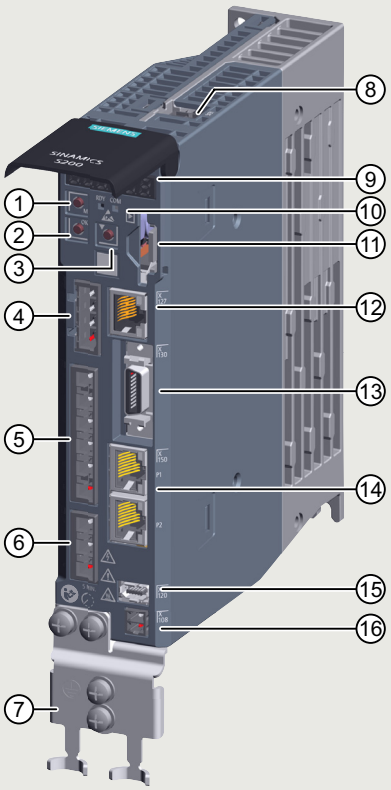

G_D211_EN_00704

1. M button
2. OK button
3. DOWN button
4. 24 V DC power supply - X124
5. Mains and braking resistor interface - X1
6. Motor interface - X2
7. Shield plate
8. STO interface - X131 [1)]
9. 6-digit display
10. LED status indicators
11. Memory card slot
12. Service interface (Ethernet) - X127
13. Control/status inputs and outputs - X130
14. PROFINET interface - X150
15. Encoder interface - X120
16. Motor holding brake interface - X108 [1)]

[1)] The interfaces X131 and X108 are only available on the SINAMICS S200 converters, not on the SINAMICS S200 Basic converters.

Interface overview SINAMICS S200 Basic servo converters, PROFINET version

© Siemens 2025

Function

	SINAMICS S200 Basic, Pulse Train Input version (PTI)	SINAMICS S200 Basic, PROFINET version
Closed-loop control		
Servo control with DSC	–	✓
Position control with pulse train	✓	–
Control functions		
Speed control with encoder	–	✓
Dynamic Servo Control (DSC)	–	✓
Pulse train input (PTI)	✓	–
Basic positioner (EPOS)	–	✓
Ramp-function generator	–	✓
Torque setpoint limitation	✓	✓
Current controller and current controller adaptation suitably adjusted for SIMOTICS S-1FL2 servomotors	✓	✓
One Button Tuning with moment of inertia estimator and reference model	✓	✓
Local measuring probe	–	✓
Simple brake control	✓	✓
Direction reversal without changing the setpoint channel	✓	✓
Travel to fixed stop	–	✓
Vertical axis	–	✓
Speed controller adaptation	✓	✓
Thermal monitoring for power unit and servomotor	✓	✓
Pulse train encoder output (PTO)	✓	–
Protection functions		
Undervoltage DC link voltage	✓	✓
Overvoltage DC link voltage	✓	✓
Overcurrent power unit	✓	✓
Overcurrent motor	✓	✓
Overload power unit (I^2t)	✓	✓
Short-circuit	✓	✓
Ground fault	✓	✓
Temperature rise servomotor	✓	✓
Temperature rise power unit	✓	✓
Safety Integrated		
Safe Torque Off (STO)	–	–
Commissioning		
Identification of the SIMOTICS S-1FL2 servomotors via the electronic type plate	✓	✓
Automatic controller optimization	✓	✓

© Siemens 2025

Integration

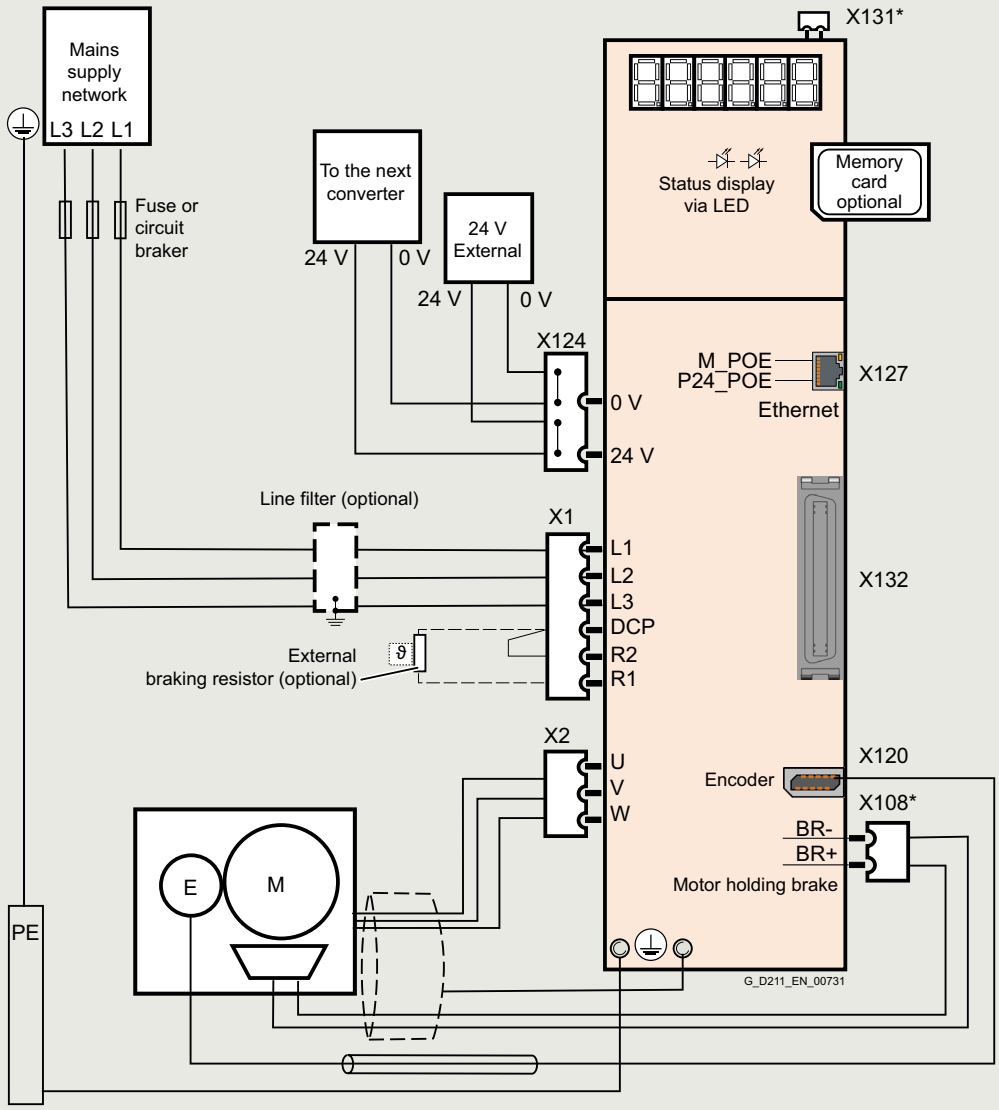

* The interfaces X131 and X108 are only available on the SINAMICS S200 converters, not on the SINAMICS S200 Basic converters.

Connection example SINAMICS S200 Basic servo converters, Pulse Train Input version (PTI), 3 AC

© Siemens 2025

Integration

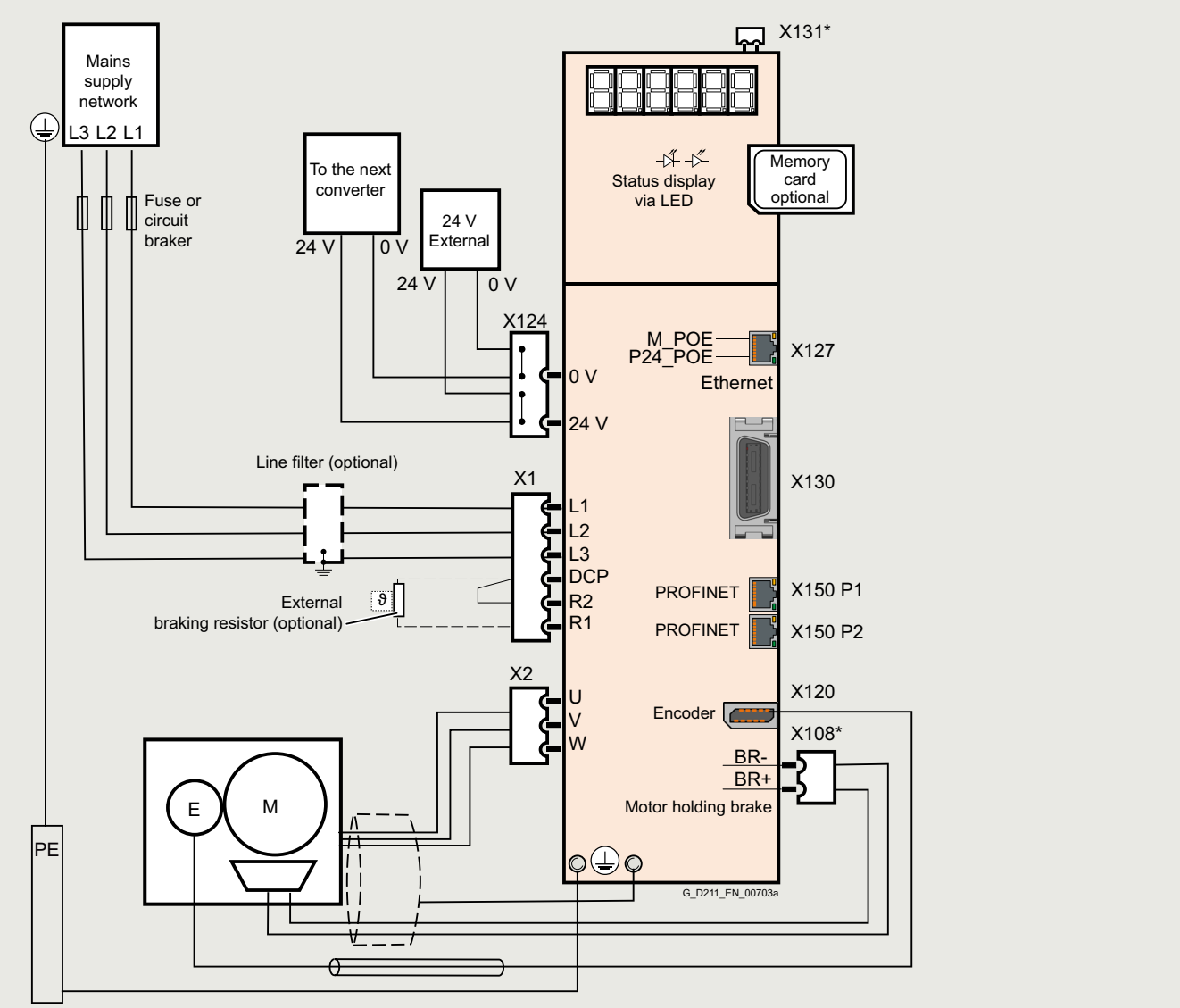

* The interfaces X131 and X108 are only available on the SINAMICS S200 converters, not on the SINAMICS S200 Basic converters.

Connection example SINAMICS S200 Basic servo converters, PROFINET version, 3 AC

© Siemens 2025

Selection and ordering data

Description	Frame size	Article No.
SINAMICS S200 Basic servo converters, 200 ... 240 V 1 / 3 AC		
with shield plate and push-in plugs, without memory card The shield clamp is included in the scope of delivery of the MOTION-CONNECT cable.		
Pulse Train Input version (PTI)		
• 0.1 kW	FSA	**6SL5610-1BB10-1AA0**
• 0.2 kW	FSA	**6SL5610-1BB10-2AA0**
• 0.4 kW	FSB	**6SL5610-1BB10-4AA0**
• 0.75 kW	FSC	**6SL5610-1BB10-8AA0**
• 1 kW	FSC	**6SL5610-1BB11-0AA0**
PROFINET version		
• 0.1 kW	FSA	**6SL5610-1BB10-1AF0**
• 0.2 kW	FSA	**6SL5610-1BB10-2AF0**
• 0.4 kW	FSB	**6SL5610-1BB10-4AF0**
• 0.75 kW	FSC	**6SL5610-1BB10-8AF0**
• 1 kW	FSC	**6SL5610-1BB11-0AF0**

Recommended SIMATIC S7 controller

More information about SIMATIC S7-1500 and SIMATIC S7-1500 T-CPU controllers is available in Catalog ST 70 and on the internet at
www.siemens.com/simatic-s7-1500

© Siemens 2025

Selection and ordering data

Accessories for SINAMICS S200 Basic servo converters

Description	Article No.
SINAMICS SD card 8 GB Parameter assignments, firmware and licenses for a converter can be stored on the memory card.	
• Empty	**6SL5970-0AA00-0AA0**
• With firmware V6.2	**6SL5570-0GC00-0AA0**
• With firmware V6.3	**6SL5570-0GD00-0AA0**
• With firmware V6.4	**6SL5570-0GE00-0AA0**
• With firmware V6.4 and SINAMICS OPC UA Single Extended license [1]	**6SL5570-0GE00-0AA0-Z H80**
SINAMICS UPC UA Single Extended license for SINAMICS S200 [1] • Certificate of License (CoL) in electronic form	**6SL5977-0AA00-1GA0**
SINAMICS SDI Pro 5.5" NEW Powerful and user-friendly operator panel for the next generation of SINAMICS converters SINAMICS S200, SINAMICS S210 (6SL5...) and SINAMICS G220	**6SL4950-0AH35-2AA0**
SINAMICS Smart Adapter Wi-Fi solution for the next generation of SINAMICS converters SINAMICS S200, SINAMICS S210 (6SL5...) and SINAMICS G220	**6SL4950-0AJ00-0AA0**
Line filter Category C2 in IEC 61800-3 is attainable for motor cable lengths up to 30 m (98.5 ft) using a line filter.	
• ≤ 18 A for 200 ... 240 V 1 AC	**6SL5550-0XB21-8CA0**
• ≤ 5 A for 200 ... 240 V 3 AC	**6SL3203-0BE15-0VA0**
Connecting cables and connectors for SIMATIC S7 controller and SINAMICS S200 Basic, Pulse Train Input version (PTI)	
Connector for setpoint cable 50-pin MDR connector	**6SL3260-2NA00-0VA0**
Setpoint cable with connector MDR 50-pin connector, free pins to controller side, length: 1 m	**6SL3260-4NA00-1VB0**
Setpoint cable with connectors on both sides and separate terminal block MDR 50-pin connector, terminal block to controller side, length: 0.5 m	**6SL5562-0XX00-0AD0**
Connecting cables and connectors for SIMATIC S7 controller and SINAMICS S200 Basic, PROFINET version	
PROFINET I/O connector 20-pin	**6SL3260-2MA00-0VA0**
PROFINET I/O cable with 20-pin MDR connector, length: 1 m (3.28 ft)	**6SL5562-1XX00-0AC0**
PROFINET I/O adapter for 20-pin MDR connector	**6SL5562-1XX00-0AD0**
Pre-assembled PROFINET cable with two RJ45 180° plugs, length: 1 m (3.28 ft)	**6XV1871-5BH10**
RJ45 data plug-in connector with 180° (straight) cable outlet	**6GK1901-1BB10-2AA0**
Standard PROFINET cable 4-core, sold by the meter, not assembled	**6XV1840-2AH10**
PROFINET patch cable For the networking of concatenated converters Industrial Ethernet TP cord, CAT 6 A, twisted pair line 4 × 2 cores, pre-assembled with two RJ45 connectors	
• 0.3 m (0.98 ft)	**6XV1870-3QE30**
• 0.5 m (1.64 ft)	**6XV1870-3QE50**

For further information about PROFINET cables refer on the internet at:
www.siemens.com/simatic-net

Spare parts for SINAMICS S200 Basic servo converters

Description	Article No.
Shield connection kit including several shield plates and fixing screws	**6SL5566-0AB00-0AA0**
Terminal kit	
• for SINAMICS S200 Basic	**6SL5668-0XX00-0AA0**

[1] OPC UA server with information model for inventory management and process data acquisition will be available soon with an V6.4 HF.

© Siemens 2025

Technical specifications

Unless explicitly specified otherwise, the following technical specifications are valid for all SINAMICS S200 Basic servo converters.

General technical specifications	
Mechanical specifications	
Vibratory load	
• Storage [2] acc. to IEC 60721-3-1: 1997	Class 1M2
• Transport [1] acc. to IEC 60721-3-2: 1997	Class 2M3
• Operation acc. to IEC 60721-3-3: 2002 - Test values acc. to IEC/EN 60068-2-6	Class 3M1 Test Fc (sinusoidal) • 10 ... 58 Hz: 0.075 mm amplitude of deflection • 58 ... 200 Hz: 1 × *g* acceleration amplitude • 10 frequency cycles per axis
Shock load	
• Storage [2] acc. to IEC 60721-3-1: 1997	Class 1M2
• Transport [1] acc. to IEC 60721-3-2: 1997	Class 2M3
• Operation acc. to IEC 60721-3-3: 2002 - Test values acc. to IEC/EN 60068-2-27	Class 3M1 Test Ea (semi-sinusoidal) • 5 × *g* peak acceleration • 30 ms duration • 3 shocks in all three axes in both directions
Environmental conditions	
Protection class According to IEC/EN 61800-5-1	Class I (with protective bonding circuit) and class III (SELV)
Degree of protection According to IEC/EN 60529	IP20 Mounting in control cabinet necessary
Permissible ambient temperature (air) in operation	0 ... 55 °C (32 ... 131 °F), >45 °C (113 °F) with power derating
Installation altitude	Up to max. 4000 m (13124 ft) (IEC/EN/UL), up to max. 2000 m (6562 ft) (CSA) • Up to 2000 m (6562 ft) above sea level without power derating • As from 2000 m (6562 ft) derating 10 % of current or 5 K per 1000 m (3281 ft) For more information on derating, see the operating instructions on the Internet at: www.siemens.com/sinamics-s200/documentation
Climatic conditions	
• Storage [2] acc. to IEC 60721-3-1: 1997	Class 2K4 -40 ... +70 °C (-40 ... +158 °F)
• Transport [1] acc. to IEC 60721-3-2: 1997	Class 2K4 -40 ... +70 °C (-40 ... +158 °F) Max. relative air humidity: 95 % at 45 °C (113 °F)
• Operation acc. to IEC 60721-3-3: 2002	Better than class 3K3 0 ... 45 °C (32 ... 113 °F) without derating 45 ... 55 °C (113 ... 131 °F) with derating Max. relative air humidity: 95 % Ice formation, condensation, dripping water, spray water, splash water and jet water are not permitted (IEC/EN 60204, Teil 1)
Environmental class/harmful chemical substances	
• Storage [2] acc. to IEC 60721-3-1: 1997	Class 1C2
• Transport [1] acc. to IEC 60721-3-2: 1997	Class 2C2
• Operation acc. to IEC 60721-3-3: 2002	Class 3C2
Organic/biological influences	
• Storage [2] acc. to IEC 60721-3-1: 1997	Class 1B1
• Transport [1] acc. to IEC 60721-3-2: 1997	Class 2B2
• Operation acc. to IEC 60721-3-3: 2002	Class 3B1
Degree of pollution According to IEC/EN 61800-5-1	2
Standards	
Certificates of suitability	CE, UKCA, cULus, RCM, EAC, KC, SEMI F47

Environmental Product Declaration (EPD)

Environmental Product Declarations (EPD) are available as PDFs for this product.
The EPD PDF provides brief and concise information about the ecological properties of a product.

You can find more information on the internet at:
https://support.industry.siemens.com/cs/ww/en/ps/29596/cert?ci=5690

[1] In transport packaging.
[2] In product packaging.

© Siemens 2025

Technical specifications

Line voltage 200 ... 240 V 1 / 3 AC		SINAMICS S200 Basic servo converters, Pulse Train Input version (PTI)				
		6SL5610-1BB10-1AA0	6SL5610-1BB10-2AA0	6SL5610-1BB10-4AA0	6SL5610-1BB10-8AA0	6SL5610-1BB11-0AA0
		SINAMICS S200 Basic servo converters, PROFINET version				
		6SL5610-1BB10-1AF0	6SL5610-1BB10-2AF0	6SL5610-1BB10-4AF0	6SL5610-1BB10-8AF0	6SL5610-1BB11-0AF0
Line supply connection						
• Supply voltage		200 ... 240 V -10 % ... +15 % 1 / 3 AC				
• Line frequency	Hz	50/60 ±10 %				
• Conductor cross-section, max.	mm^2	2.5				
• Line system configuration		Grounded TN/TT networks and ungrounded IT networks Depending on the motor-converter combination and the planned installation height, boundary conditions must be observed with regard to the line connection. For more information, see the operating instructions on the Internet at: www.siemens.com/sinamics-s200/documentation				
Rated current						
• 1 AC	A	1.2	2.0	3.0	8.0	8.0
• 3 AC	A	0.6	1.1	1.8	4.0	4.0
Inrush current	A	10.5	10.5	8.5	7.6	7.6
Power loss	W	12	15	24	45	46
Maximum permissible short-circuit current (SCCR)	kA	100				
Electronic power supply						
• Voltage		24 V -15 % ... +20 %				
• Power requirement, max.		1.2 A without brake, 2.2 A with brake				
• Conductor cross-section, max.	mm^2	2.5				
Output						
• Rated power 230 V	kW	0.1	0.2	0.4	0.75	1.0
• Rated current	A	0.8	1.3	2.4	4.4	4.4
• Output current, max.	A	3.3	5.1	9.2	16.8	16.8
Overload capability		350 %				300 %
Pulse frequency power unit	kHz	8				
Output frequency	Hz	0 ... 550				
Line filter		Category C2 (up to 30 m (98.5 ft) motor cable length), see accessories/line filter				
Braking resistor		Without			Integrated	
Digital inputs [1]						
• Fast digital inputs						
- Pulse Train Input version (PTI)		–				
- PROFINET version		2				
• General digital inputs						
- Pulse Train Input version (PTI)		6				
- PROFINET version		2				
• Low level		-30 V ... +5 V and ≤2 mA				
• High level		15 V ... 30 V				
• Current consumption, max.	mA	4				
• Delay time, typ., L → H		5 µs (for fast digital inputs) or 10 µs (for general digital inputs)				
• Delay time, typ., H → L		5 µs (for fast digital inputs) or 150 µs (for general digital inputs)				
• Galvanic isolation		No (for fast digital inputs) or Yes (for general digital inputs)				
• Conductor cross-section, max.	mm^2	1.5				
Digital outputs [1]						
- Pulse Train Input version (PTI)		4				
- PROFINET version		1				
• Load current per digital output, max.	mA	100				
• Delay time	ms	< 2				
• Conductor cross-section, max.	mm^2	1.5				
Analog inputs						
- Pulse Train Input version (PTI)		–				
- PROFINET version		–				
Analog outputs						
- Pulse Train Input version (PTI)		–				
- PROFINET version		–				
Frame Size		FSA	FSA	FSB	FSC	FSC
Cooling		Convection (without fan)				
Dimensions						
• Width	mm (in)	40 (1.57)	40 (1.57)	40 (1.57)	60 (2.36)	60 (2.36)
• Height	mm (in)	170 (6.69)	170 (6.69)	170 (6.69)	170 (6.69)	170 (6.69)
• Depth	mm (in)	135 (5.31)	135 (5.31)	170 (6.69)	195 (7.68)	195 (7.68)
Weight, approx.	kg (lb)	0.9 (1.98)	0.9 (1.98)	1.1 (2.43)	1.8 (3.97)	1.8 (3.97)

[1] The specified delay times refer to the hardware. The actual reaction time depends on the time slot in which the digital input or digital output is processed.

© Siemens 2025

Technical specifications

Technical specifications of the internal braking resistor

SINAMICS S200 Basic servo converters				Internal braking resistor			
Pulse Train Input version (PTI) Type	**PROFINET version** Type	Frame Size	Rated power kW	Resistance Ω	Max. continuous power W	Max. peak power W	Max. braking energy J
Line voltage 200 ... 240 V 1 / 3 AC							
6SL5610-1BB10-1AA0	6SL5610-1BB10-1AF0	FSA	0.1	Without			
6SL5610-1BB10-2AA0	6SL5610-1BB10-2AF0	FSA	0.2	Without			
6SL5610-1BB10-4AA0	6SL5610-1BB10-4AF0	FSB	0.4	Without			
6SL5610-1BB10-8AA0	6SL5610-1BB10-8AF0	FSC	0.75	50	30	1884	292
6SL5610-1BB11-0AA0	6SL5610-1BB11-0AF0	FSC	1.0	50	30	1884	292

For more information, see the operating instructions on the Internet at:
www.siemens.com/sinamics-s200/documentation

Dimensional drawings

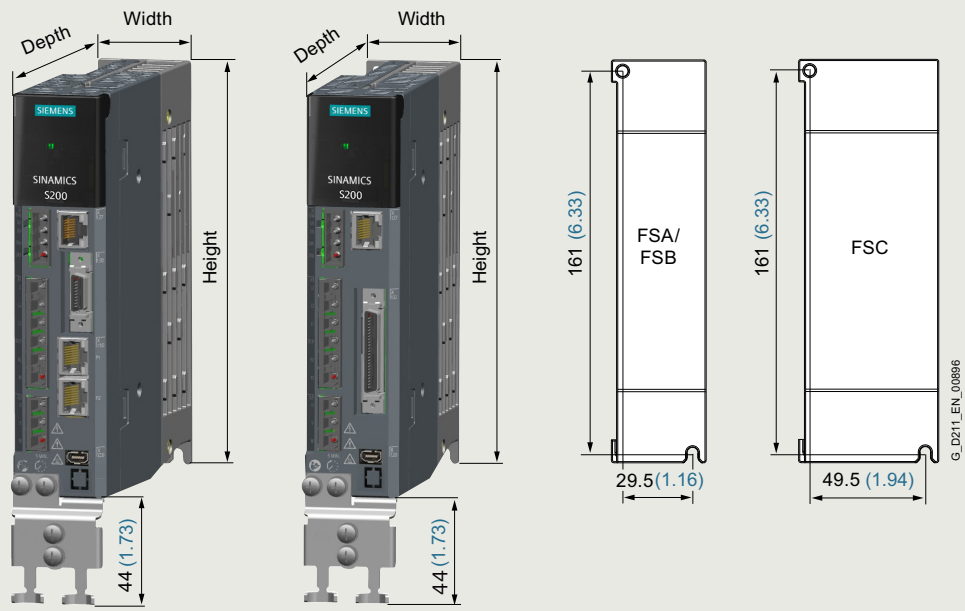

Frame size	a (Width)	b (Height)	c (Depth)	Fixing
FSA	40 (1.57)	170 (6.69)	135 (5.31)	2 x M4 / 2.5 Nm
FSB	40 (1.57)	170 (6.69)	170 (6.69)	
FSC	60 (2.36)	170 (6.69)	195 (7.68)	

Dimensions in mm (values in brackets are in inches)

SINAMICS S200 Basic servo converters, FSA to FSC, 200 V 1 AC / 3 AC, IP20

© Siemens 2025

More information

Identification link according to IEC 61406 for SINAMICS S200

The ID link contains the article and serial number of the product. As a QR code, it replaces the previous data matrix code on the nameplate and takes you with the URL directly to a product information page on the internet with access to the technical documentation, data sheet, certificates, FAQs, product notifications, and catalogs. Paper package inserts become superfluous since the information is available electronically directly via the QR code, even years later. In this way, we are making a valuable contribution to the preservation of our environment. You don't need an additional app. Simply scan the QR code with your smartphone or tablet. According to IEC 61406, the QR code of an ID link is marked with a frame and a triangle at the bottom right.
With their globally unique identifiers, Siemens products are ready for Industry 4.0.
The ID serves as a connection to the administration shell with which modules of the digital twin can be provided.

Environmental Product Declaration (EPD)

Environmental Product Declarations (EPD) are available as PDFs for this product.
The EPD PDF provides brief and concise information about the ecological properties of a product.

You can find more information on the internet at:
https://support.industry.siemens.com/cs/ww/en/ps/29596/cert?ci=5690

Further documentation, such as the operating instructions, is available free on the internet at:
www.siemens.com/sinamics-s200/documentation

Detailed information on the SINAMICS S200 drive system, including the latest technical documentation (brochures, tutorials, dimensional drawings, certificates, manuals and operating instructions), is available on the internet at:
www.siemens.com/sinamics-s200

and is also available via the Siemens Product Configurator on the internet.
The Siemens Product Configurator can be found in SiePortal at the following address:
www.siemens.com/sinamics-s200/configuration

© Siemens 2025

Overview

SINAMICS S200 servo converters

SINAMICS S200 servo converters, 200 ... 240 V 1 AC / 3 AC,
Pulse Train Input version (PTI), frame sizes FSA, FSB and FSC

SINAMICS S200 servo converters, 380 ... 480 V 3 AC,
Pulse Train Input version (PTI), frame sizes FSA, FSB, FSC and FSD

SINAMICS S200 servo converters, 200 ... 240 V 1 AC / 3 AC,
PROFINET version, frame sizes FSA, FSB and FSC

SINAMICS S200 servo converters, 380 ... 480 V 3 AC,
PROFINET version, frame sizes FSA, FSB, FSC and FSD

The SINAMICS S200 servo converters consist of a basic version and a standard version with pulse train input position control (PTI) or PROFINET RT/IRT (PN) to meet various needs of applications and works perfectly together with SIMATIC controllers. With the SINAMICS S200, the PROFINET function "Dynamic Frame Packing" (DFP) is available, which enables the connection of large numbers of axes to a SIMATIC controller.

- SINAMICS S200 Basic servo converters, power range 0.1 to 1 kW at 200 ... 240 V 1 AC / 3 AC
- SINAMICS S200 servo converters, power range 0.1 to 1 kW at 200 ... 240 V 1 AC / 3 AC and 0.2 to 7 kW at 380 ... 480 V 3 AC

© Siemens 2025

Design

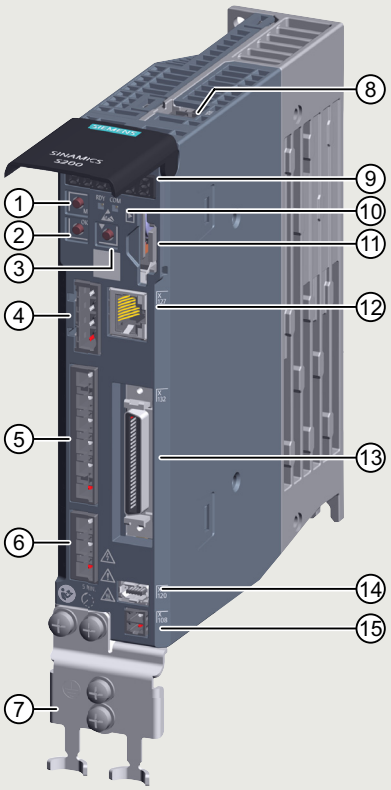

1. M button
2. OK button
3. DOWN button
4. 24 V DC power supply - X124
5. Mains and braking resistor interface - X1
6. Motor power interface - X2
7. Shield plate
8. STO interface - X131 [1)]
9. 6-digit display
10. LED status indicators
11. Memory card slot
12. Service interface (Ethernet) - X127
13. Control/status inputs and outputs - X132
14. Encoder interface - X120
15. Motor holding brake interface - X108 [1)]

[1)] The interfaces X131 and X108 are only available on the SINAMICS S200 converters, not on the SINAMICS S200 Basic converters.

Interface overview SINAMICS S200 servo converters, Pulse Train Input version (PTI)

© Siemens 2025

Design

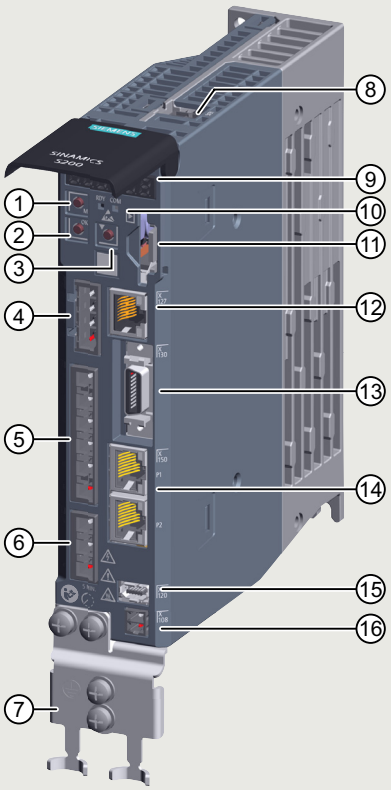

1. M button
2. OK button
3. DOWN button
4. 24 V DC power supply - X124
5. Mains and braking resistor interface - X1
6. Motor interface - X2
7. Shield plate
8. STO interface - X131 [1)]
9. 6-digit display
10. LED status indicators
11. Memory card slot
12. Service interface (Ethernet) - X127
13. Control/status inputs and outputs - X130
14. PROFINET interface - X150
15. Encoder interface - X120
16. Motor holding brake interface - X108 [1)]

[1)] The interfaces X131 and X108 are only available on the SINAMICS S200 converters, not on the SINAMICS S200 Basic converters.

Interface overview SINAMICS S200 servo converters, PROFINET version

© Siemens 2025

Function

	SINAMICS S200, Pulse Train Input version (PTI)	SINAMICS S200, PROFINET version
Closed-loop control		
Servo control with DSC	–	✓
Position control with pulse train	✓	–
Control functions		
Speed control with encoder	✓	✓
Dynamic Servo Control (DSC)	–	✓
Pulse train input (PTI)	✓	–
Basic positioner (EPOS)	–	✓
Ramp-function generator	✓	✓
Torque setpoint limitation	✓	✓
Current controller and current controller adaptation suitably adjusted for SIMOTICS S-1FL2 servomotors	✓	✓
One Button Tuning with moment of inertia estimator and reference model	✓	✓
Local measuring probe	–	✓
Simple brake control	✓	✓
Direction reversal without changing the setpoint channel	✓	✓
Travel to fixed stop	–	✓
Vertical axis	–	✓
Speed controller adaptation	✓	✓
Thermal monitoring for power unit and servomotor	✓	✓
Pulse train encoder output (PTO)	✓	✓
Protection functions		
Undervoltage DC link voltage	✓	✓
Overvoltage DC link voltage	✓	✓
Overcurrent power unit	✓	✓
Overcurrent motor	✓	✓
Overload power unit (I^2t)	✓	✓
Short-circuit	✓	✓
Ground fault	✓	✓
Temperature rise servomotor	✓	✓
Temperature rise power unit	✓	✓
Safety Integrated		
Safe Torque Off (STO)	✓	✓
Commissioning		
Identification of the SIMOTICS S-1FL2 servomotors via the electronic type plate	✓	✓
Automatic controller optimization	✓	✓

© Siemens 2025

Integration

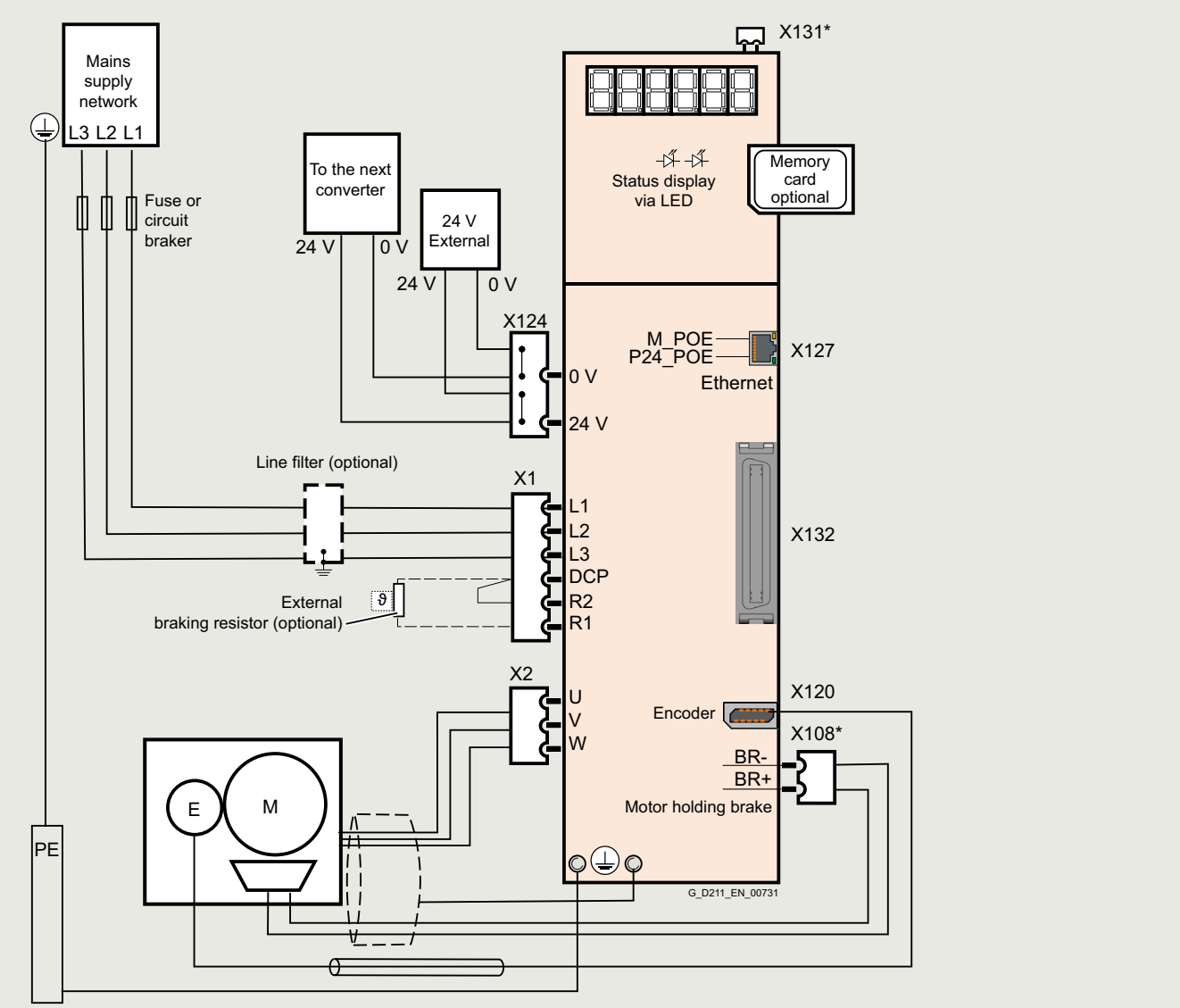

* The interfaces X131 and X108 are only available on the SINAMICS S200 converters, not on the SINAMICS S200 Basic converters.

Connection example SINAMICS S200 servo converters, Pulse Train Input version (PTI), 3 AC

© Siemens 2025

Integration

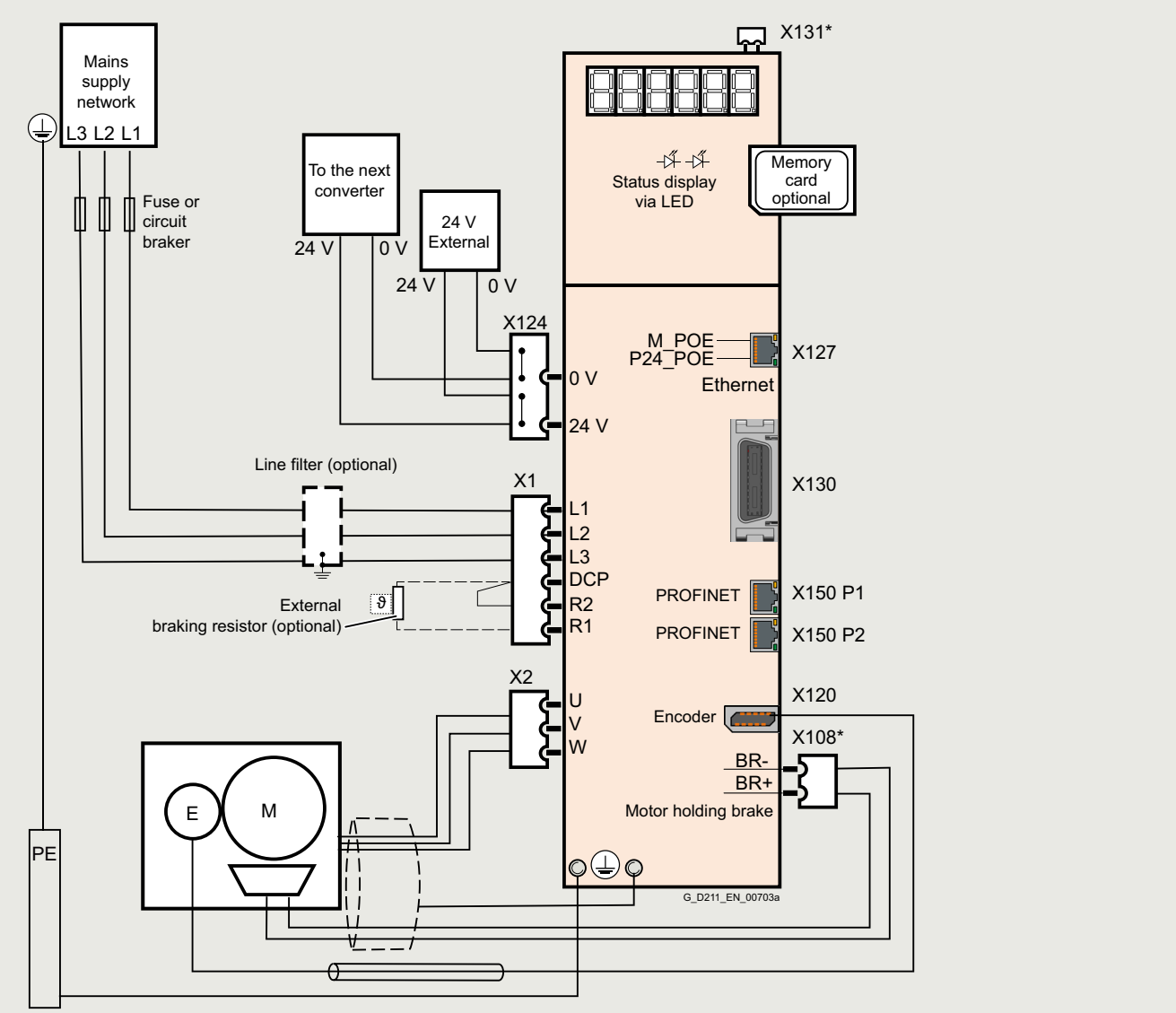

* The interfaces X131 and X108 are only available on the SINAMICS S200 converters, not on the SINAMICS S200 Basic converters.

Connection example SINAMICS S200 servo converters, PROFINET version, 3 AC

© Siemens 2025

2

Selection and ordering data

Description	Frame size	Article No.
SINAMICS S200 servo converters, 200 ... 240 V 1 / 3 AC		
with shield plate and push-in plugs, without memory card The shield clamp is included in the scope of delivery of the MOTION-CONNECT cable.		
Pulse Train Input version (PTI)		
• 0.1 kW	FSA	**6SL5510-1BB10-1AA0**
• 0.2 kW	FSA	**6SL5510-1BB10-2AA0**
• 0.4 kW	FSB	**6SL5510-1BB10-4AA0**
• 0.75 kW	FSC	**6SL5510-1BB10-8AA0**
• 1 kW	FSC	**6SL5510-1BB11-0AA0**
PROFINET version		
• 0.1 kW	FSA	**6SL5510-1BB10-1AF0**
• 0.2 kW	FSA	**6SL5510-1BB10-2AF0**
• 0.4 kW	FSB	**6SL5510-1BB10-4AF0**
• 0.75 kW	FSC	**6SL5510-1BB10-8AF0**
• 1 kW	FSC	**6SL5510-1BB11-0AF0**

Description	Frame size	Article No.
SINAMICS S200 servo converters, 380 ... 480 V 3 AC		
with shield plate and push-in plugs, without memory card The shield clamp is included in the scope of delivery of the MOTION-CONNECT cable.		
Pulse Train Input version (PTI)		
• 0.2 kW	FSA	**6SL5510-1BE10-2AA0**
• 0.4 kW	FSA	**6SL5510-1BE10-4AA0**
• 0.75 kW	FSB	**6SL5510-1BE10-8AA0**
• 1 kW	FSB	**6SL5510-1BE11-0AA0**
• 1.75 kW	FSC	**6SL5510-1BE11-5AA0**
• 2.5 kW	FSC	**6SL5510-1BE12-5AA0**
• 3.5 kW	FSD	**6SL5510-1BE13-5AA0**
• 5 kW	FSD	**6SL5510-1BE15-0AA0**
• 7 kW	FSD	**6SL5510-1BE17-0AA0**
PROFINET version		
• 0.2 kW	FSA	**6SL5510-1BE10-2AF0**
• 0.4 kW	FSA	**6SL5510-1BE10-4AF0**
• 0.75 kW	FSB	**6SL5510-1BE10-8AF0**
• 1 kW	FSB	**6SL5510-1BE11-0AF0**
• 1.75 kW	FSC	**6SL5510-1BE11-5AF0**
• 2.5 kW	FSC	**6SL5510-1BE12-5AF0**
• 3.5 kW	FSD	**6SL5510-1BE13-5AF0**
• 5 kW	FSD	**6SL5510-1BE15-0AF0**
• 7 kW	FSD	**6SL5510-1BE17-0AF0**

© Siemens 2025

Selection and ordering data

Accessories for SINAMICS S200 servo converters

Description	Article No.
SINAMICS SD card 8 GB Parameter assignments, firmware and licenses for a converter can be stored on the memory card.	
• Empty	**6SL5970-0AA00-0AA0**
• With firmware V6.2	**6SL5570-0GC00-0AA0**
• With firmware V6.3	**6SL5570-0GD00-0AA0**
• With firmware V6.4	**6SL5570-0GE00-0AA0**
• With firmware V6.4 and SINAMICS OPC UA Single Extended license [1]	**6SL5570-0GE00-0AA0-Z H80**
SINAMICS UPC UA Single Extended license for SINAMICS S200 [1] • Certificate of License (CoL) in electronic form	**6SL5977-0AA00-1GA0**
SINAMICS SDI Pro 5.5" NEW Powerful and user-friendly operator panel for the next generation of SINAMICS converters SINAMICS S200, SINAMICS S210 (6SL5...) and SINAMICS G220	**6SL4950-0AH35-2AA0**
SINAMICS Smart Adapter Wi-Fi solution for the next generation of SINAMICS converters SINAMICS S200, SINAMICS S210 (6SL5...) and SINAMICS G220	**6SL4950-0AJ00-0AA0**
Line filter Category C2 in IEC 61800-3 is attainable for motor cable lengths up to 30 m (98.5 ft) using a line filter.	
• ≤ 18 A for 200 ... 240 V 1 AC, frame sizes FSA, FSB, FSC	**6SL5550-0XB21-8CA0**
• ≤ 5 A for 200 ... 240 V 3 AC, frame sizes FSA, FSB, FSC	**6SL3203-0BE15-0VA0**
• ≤ 5 A for 380 ... 480 V 3 AC, frame sizes FSA and FSB	**6SL5550-0XE20-5CA0**
• ≤ 12 A for 380 ... 480 V 3 AC, frame size FSC	**6SL5550-0XE21-2CA0**
• ≤ 20 A for 380 ... 480 V 3 AC, frame size FSD	**6SL5550-0XE22-0CA0**
Connecting cables and connectors for SIMATIC S7 controller and SINAMICS S200, Pulse Train Input version (PTI)	
Connector for setpoint cable 50-pin MDR connector	**6SL3260-2NA00-0VA0**
Setpoint cable with connector MDR 50-pin connector, free pins to controller side, length: 1 m	**6SL3260-4NA00-1VB0**
Setpoint cable with connectors on both sides and separate terminal block MDR 50-pin connector, terminal block to controller side, length: 0.5 m	**6SL5562-0XX00-0AD0**
Connecting cables and connectors for SIMATIC S7 controller and SINAMICS S200, PROFINET version	
PROFINET I/O connector 20-pin	**6SL3260-2MA00-0VA0**
PROFINET I/O cable with 20-pin MDR connector, length: 1 m (3.28 ft)	**6SL5562-1XX00-0AC0**
PROFINET I/O adapter for 20-pin MDR connector	**6SL5562-1XX00-0AD0**
Pre-assembled PROFINET cable with two RJ45 180° plugs, length: 1 m (3.28 ft)	**6XV1871-5BH10**
RJ45 data plug-in connector with 180° (straight) cable outlet	**6GK1901-1BB10-2AA0**
Standard PROFINET cable 4-core, sold by the meter, not assembled	**6XV1840-2AH10**
PROFINET patch cable For the networking of concatenated converters Industrial Ethernet TP cord, CAT 6 A, twisted pair line 4 × 2 cores, pre-assembled with two RJ45 connectors	
• 0.3 m (0.98 ft)	**6XV1870-3QE30**
• 0.5 m (1.64 ft)	**6XV1870-3QE50**

For further information about PROFINET cables refer on the internet at:
www.siemens.com/simatic-net

Recommended SIMATIC S7 controller

More information about SIMATIC S7-1500 and SIMATIC S7-1500 T-CPU controllers is available in Catalog ST 70 and on the internet at
www.siemens.com/simatic-s7-1500

Spare parts for SINAMICS S200 servo converters

Description	Article No.
Shield connection kit including several shield plates and fixing screws	**6SL5566-0AB00-0AA0**
Terminal kit	
• for SINAMICS S200	**6SL5568-0XX00-0AA0**
Ersatzlüfter	
• for SINAMICS S200, 400 V Version, FSC	**6SL5560-0CE00-0AA0**
• for SINAMICS S200, 400 V Version, FSD	**6SL5560-0DE00-0AA0**

[1] OPC UA server with information model for inventory management and process data acquisition will be available soon with an V6.4 HF.

© Siemens 2025

Technical specifications

Unless explicitly specified otherwise, the following technical specifications are valid for all SINAMICS S200 servo converters.

General technical specifications	
Mechanical specifications	
Vibratory load	
• Storage [2] acc. to IEC 60721-3-1: 1997	Class 1M2
• Transport [1] acc. to IEC 60721-3-2: 1997	Class 2M3
• Operation acc. to IEC 60721-3-3: 2002 - Test values acc. to IEC/EN 60068-2-6	Class 3M1 Test Fc (sinusoidal) • 10 ... 58 Hz: 0.075 mm amplitude of deflection • 58 ... 200 Hz: 1 × *g* acceleration amplitude • 10 frequency cycles per axis
Shock load	
• Storage [2] acc. to IEC 60721-3-1: 1997	Class 1M2
• Transport [1] acc. to IEC 60721-3-2: 1997	Class 2M3
• Operation acc. to IEC 60721-3-3: 2002 - Test values acc. to IEC/EN 60068-2-27	Class 3M1 Test Ea (semi-sinusoidal) • 5 × *g* peak acceleration • 30 ms duration • 3 shocks in all three axes in both directions
Environmental conditions	
Protection class According to IEC/EN 61800-5-1	Class I (with protective bonding circuit) and class III (SELV)
Degree of protection According to IEC/EN 60529	IP20 Mounting in control cabinet necessary
Permissible ambient temperature (air) in operation	0 ... 55 °C (32 ... 131 °F), >45 °C (113 °F) with power derating
Installation altitude	Up to max. 4000 m (13124 ft) (IEC/EN/UL), up to max. 2000 m (6562 ft) (CSA) • Up to 2000 m (6562 ft) above sea level without power derating • As from 2000 m (6562 ft) derating 10 % of current or 5 K per 1000 m (3281 ft) For more information on derating, see the operating instructions on the Internet at: www.siemens.com/sinamics-s200/documentation
Climatic conditions	
• Storage [2] acc. to IEC 60721-3-1: 1997	Class 2K4 -40 ... +70 °C (-40 ... +158 °F)
• Transport [1] acc. to IEC 60721-3-2: 1997	Class 2K4 -40 ... +70 °C (-40 ... +158 °F) Max. relative air humidity: 95 % at 45 °C (113 °F)
• Operation acc. to IEC 60721-3-3: 2002	Better than class 3K3 0 ... 45 °C (32 ... 113 °F) without derating 45 ... 55 °C (113 ... 131 °F) with derating Max. relative air humidity: 95 % Ice formation, condensation, dripping water, spray water, splash water and jet water are not permitted (IEC/EN 60204, Teil 1)
Environmental class/harmful chemical substances	
• Storage [2] acc. to IEC 60721-3-1: 1997	Class 1C2
• Transport [1] acc. to IEC 60721-3-2: 1997	Class 2C2
• Operation acc. to IEC 60721-3-3: 2002	Class 3C2
Organic/biological influences	
• Storage [2] acc. to IEC 60721-3-1: 1997	Class 1B1
• Transport [1] acc. to IEC 60721-3-2: 1997	Class 2B2
• Operation acc. to IEC 60721-3-3: 2002	Class 3B1
Degree of pollution According to IEC/EN 61800-5-1	2
Standards	
Certificates of suitability	CE, UKCA, cULus, RCM, EAC, KC, SEMI F47
Integrated safety functions and functional safety	Safe Torque Off (STO) acc. to • SIL 3 per IEC 61508 part 1 to 3 (2010) and IEC 61800-5-2 (2016) • PL e per ISO 13849 part 1 (2015) • Category 4 per ISO 13849 part 1 (2015)

Environmental Product Declaration (EPD)

Environmental Product Declarations (EPD) are available as PDFs for this product.
The EPD PDF provides brief and concise information about the ecological properties of a product.

You can find more information on the internet at:
https://support.industry.siemens.com/cs/ww/en/ps/29596/cert?ci=5690

[1] In transport packaging.
[2] In product packaging.

© Siemens 2025

Technical specifications

Line voltage 200 ... 240 V 1 / 3 AC		SINAMICS S200 servo converters, Pulse Train Input version (PTI)				
		6SL5510-1BB10-1AA0	6SL5510-1BB10-2AA0	6SL5510-1BB10-4AA0	6SL5510-1BB10-8AA0	6SL5510-1BB11-0AA0
		SINAMICS S200 servo converters, PROFINET version				
		6SL5510-1BB10-1AF0	6SL5510-1BB10-2AF0	6SL5510-1BB10-4AF0	6SL5510-1BB10-8AF0	6SL5510-1BB11-0AF0
Line supply connection						
• Supply voltage		200 ... 240 V -10 % ... +15 % 1 / 3 AC				
• Line frequency	Hz	50/60 ±10 %				
• Conductor cross-section, max.	mm^2	2.5				
• Line system configuration		Grounded TN/TT networks and ungrounded IT networks Depending on the motor-converter combination and the planned installation height, boundary conditions must be observed with regard to the line connection. For more information, see the operating instructions on the Internet at: www.siemens.com/sinamics-s200/documentation				
Rated current						
• 1 AC	A	1.2	2.0	3.0	8.0	8.0
• 3 AC	A	0.6	1.1	1.8	4.0	4.0
Inrush current	A	10.5	10.5	8.5	7.6	7.6
Power loss	W	12	15	24	45	46
Maximum permissible short-circuit current (SCCR)	kA	100				
Electronic power supply						
• Voltage		24 V -15 % ... +20 %				
• Power requirement, max.		1.2 A without brake, 2.2 A with brake				
• Conductor cross-section, max.	mm^2	2.5				
Output						
• Rated power 230 V	kW	0.1	0.2	0.4	0.75	1.0
• Rated current	A	0.8	1.3	2.4	4.4	4.4
• Output current, max.	A	3.3	5.1	9.2	16.8	16.8
Overload capability		350 %				300 %
Pulse frequency power unit	kHz	8				
Output frequency	Hz	0 ... 550				
Line filter		Category C2 (up to 30 m (98.5 ft) motor cable length), see accessories/line filter				
Braking resistor		Without	Integrated			
Digital inputs [1]						
• Fast digital inputs						
- Pulse Train Input version (PTI)		2				
- PROFINET version		2				
• General digital inputs						
- Pulse Train Input version (PTI)		8				
- PROFINET version		2				
• Low level		-30 V ... +5 V and ≤2 mA				
• High level		15 V ... 30 V				
• Current consumption, max.	mA	4				
• Delay time, typ., L → H		5 µs (for fast digital inputs) or 10 µs (for general digital inputs)				
• Delay time, typ., H → L		5 µs (for fast digital inputs) or 150 µs (for general digital inputs)				
• Galvanic isolation		No (for fast digital inputs) or Yes (for general digital inputs)				
• Conductor cross-section, max.	mm^2	1.5				
Digital outputs [1]						
- Pulse Train Input version (PTI)		6				
- PROFINET version		2				
• Load current per digital output, max.	mA	100				
• Delay time	ms	< 2				
• Conductor cross-section, max.	mm^2	1.5				
Analog inputs						
- Pulse Train Input version (PTI)		2				
- PROFINET version		–				
• Input voltage range		-10 V ... +10 V				
• Resolution		16 bit				
Analog outputs						
- Impulsfolge-Version (PTI)		2				
- PROFINET-Version		–				
• Output voltage range		-10 V ... +10 V				
• Resolution		12 bit				
Frame Size		FSA	FSA	FSB	FSC	FSC
Cooling		Convection (without fan)				
Dimensions						
• Width	mm (in)	40 (1.57)	40 (1.57)	40 (1.57)	60 (2.36)	60 (2.36)
• Height	mm (in)	170 (6.69)	170 (6.69)	170 (6.69)	170 (6.69)	170 (6.69)
• Depth	mm (in)	135 (5.31)	135 (5.31)	170 (6.69)	195 (7.68)	195 (7.68)
Weight, approx.	kg (lb)	0.9 (1.98)	0.9 (1.98)	1.1 (2.43)	1.8 (3.97)	1.8 (3.97)

[1] The specified delay times refer to the hardware. The actual reaction time depends on the time slot in which the digital input or digital output is processed.

© Siemens 2025

Technical specifications

Line voltage 380 ... 480 V 3 AC		SINAMICS S200 servo converters, Pulse Train Input version (PTI)								
		6SL5510-1BE10-2AA0	6SL5510-1BE10-4AA0	6SL5510-1BE10-8AA0	6SL5510-1BE11-0AA0	6SL5510-1BE11-5AA0	6SL5510-1BE12-5AA0	6SL5510-1BE13-5AA0	6SL5510-1BE15-0AA0	6SL5510-1BE17-0AA0
		SINAMICS S200 servo converters, PROFINET version								
		6SL5510-1BE10-2AF0	6SL5510-1BE10-4AF0	6SL5510-1BE10-8AF0	6SL5510-1BE11-0AF0	6SL5510-1BE11-5AF0	6SL5510-1BE12-5AF0	6SL5510-1BE13-5AF0	6SL5510-1BE15-0AF0	6SL5510-1BE17-0AF0
Line supply connection										
• Supply voltage		380 ... 480 V -10 % ... +15 % 3 AC								
• Line frequency	Hz	50/60 ±10 %								
• Conductor cross-section, max.	mm^2	2.5								
• Line system configuration		Grounded TN/TT networks and ungrounded IT networks Depending on the motor-converter combination and the planned installation height, boundary conditions must be observed with regard to the line connection. For more information, see the operating instructions on the Internet at: www.siemens.com/sinamics-s200/documentation								
Rated current	A	1.3	1.3	2.5	3.0	5.5	8.0	11.0	13.0	14.2
Inrush current	A	7.5	7.5	7.5	7.5	15.0	15.0	3.0	3.0	3.0
Power loss	W	31	32	46	54	84	123	171	194	205
Maximum permissible short-circuit current (SCCR)	kA	65								
Electronic power supply										
• Voltage		24 V -15 % ... +20 %								
• Power requirement, max.		1.2 A without brake, 3.2 A with brake								
• Conductor cross-section, max.	mm^2	2.5								
Output										
• Rated power 400 V	kW	0.2	0.4	0.75	1.0	1.75	2.5	3.5	5.0	7.0
• Rated current	A	1.3	1.3	2.5	3.0	5.3	7.8	11.0	12.6	13.2
• Output current, max.	A	5.1	6.0	9.3	11.5	20.0	26.5	38.1	38.8	37.4
Overload capability		350 %			300 %					
Pulse frequency power unit	kHz	8								
Output frequency	Hz	0 ... 550								
Line filter		Category C2 (up to 30 m (98.5 ft) motor cable length), see accessories/line filter								
Braking resistor		Integrated								
Digital inputs [1]										
• Fast digital inputs										
- Pulse Train Input version (PTI)		2								
- PROFINET version		2								
• General digital inputs										
- Pulse Train Input version (PTI)		8								
- PROFINET version		2								
• Low level		-30 V ... +5 V and ≤2 mA								
• High level		15 V ... 30 V								
• Current consumption, max.	mA	4								
• Delay time, typ., L → H		5 µs (for fast digital inputs) or 10 µs (for general digital inputs)								
• Delay time, typ., H → L		5 µs (for fast digital inputs) or 150 µs (for general digital inputs)								
• Galvanic isolation		No (for fast digital inputs) or Yes (for general digital inputs)								
• Conductor cross-section, max.	mm^2	1.5								
Digital outputs [1]										
- Pulse Train Input version (PTI)		6								
- PROFINET version		2								
• Load current per digital output, max.	mA	100								
• Delay time	ms	< 2								
• Conductor cross-section, max.	mm^2	1.5								
Analog inputs										
- Pulse Train Input version (PTI)		2								
- PROFINET version		–								
• Input voltage range		-10 V ... +10 V								
• Resolution		16 bit								
Analog outputs										
- Impulsfolge-Version (PTI)		2								
- PROFINET-Version		–								
• Output voltage range		-10 V ... +10 V								
• Resolution		12 bit								
Frame Size		FSA	FSA	FSB	FSB	FSC	FSC	FSD	FSD	FSD
Cooling		Convection (without fan)				Air cooling with integrated fan				
Dimensions										
• Width	mm (in)	50 (1.97)	50 (1.97)	60 (2.36)	60 (2.36)	70 (2.76)	70 (2.76)	95 (3.74)	95 (3.74)	95 (3.74)
• Height	mm (in)	180 (7.09)	180 (7.09)	180 (7.09)	180 (7.09)	180 (7.09)	180 (7.09)	260 (10,24)	260 (10,24)	260 (10,24)
• Depth	mm (in)	200 (7.87)	200 (7.87)	200 (7.87)	200 (7.87)	200 (7.87)	200 (7.87)	230 (9.06)	230 (9.06)	230 (9.06)
Weight, approx.	kg (lb)	1.5 (3.31)	1.5 (3.31)	1.9 (4.19)	1.9 (4.19)	2.0 (4.41)	2.0 (4.41)	4.5 (9.92)	4.5 (9.92)	4.5 (9.92)

[1] The specified delay times refer to the hardware. The actual reaction time depends on the time slot in which the digital input or digital output is processed.

© Siemens 2025

Technical specifications

Technical specifications of the internal braking resistor

SINAMICS S200 servo converters				Internal braking resistor			
Pulse Train Input version (PTI)	**PROFINET version** Type	Frame Size	Rated power kW	Resistance Ω	Max. continuous power W	Max. peak power W	Max. braking energy J
Line voltage 200 ... 240 V 1 / 3 AC							
6SL5510-1BB10-1AA0	6SL5510-1BB10-1AF0	FSA	0.1	Without			
6SL5510-1BB10-2AA0	6SL5510-1BB10-2AF0	FSA	0.2	200	8	373	63
6SL5510-1BB10-4AA0	6SL5510-1BB10-4AF0	FSB	0.4	100	16	742	123
6SL5510-1BB10-8AA0	6SL5510-1BB10-8AF0	FSC	0.75	50	30	1884	292
6SL5510-1BB11-0AA0	6SL5510-1BB11-0AF0	FSC	1.0	50	30	1884	292
Line voltage 380 ... 480 V 3 AC							
6SL5510-1BE10-2AA0	6SL5510-1BE10-2AF0	FSA	0.2	500	14	754	210
6SL5510-1BE10-4AA0	6SL5510-1BE10-4AF0	FSA	0.4	500	14	754	210
6SL5510-1BE10-8AA0	6SL5510-1BE10-8AF0	FSB	0.75	160	15	2312	637
6SL5510-1BE11-0AA0	6SL5510-1BE11-0AF0	FSB	1.0	160	15	2312	637
6SL5510-1BE11-5AA0	6SL5510-1BE11-5AF0	FSC	1.75	70	30	5086	1137
6SL5510-1BE12-5AA0	6SL5510-1BE12-5AF0	FSC	2.5	70	30	5086	1137
6SL5510-1BE13-5AA0	6SL5510-1BE13-5AF0	FSD	3.5	27	65	9896	1948
6SL5510-1BE15-0AA0	6SL5510-1BE15-0AF0	FSD	5.0	27	65	9896	1948
6SL5510-1BE17-0AA0	6SL5510-1BE17-0AF0	FSD	7.0	27	65	9896	1948

For more information, see the operating instructions on the Internet at:
www.siemens.com/sinamics-s200/documentation

Dimensional drawings

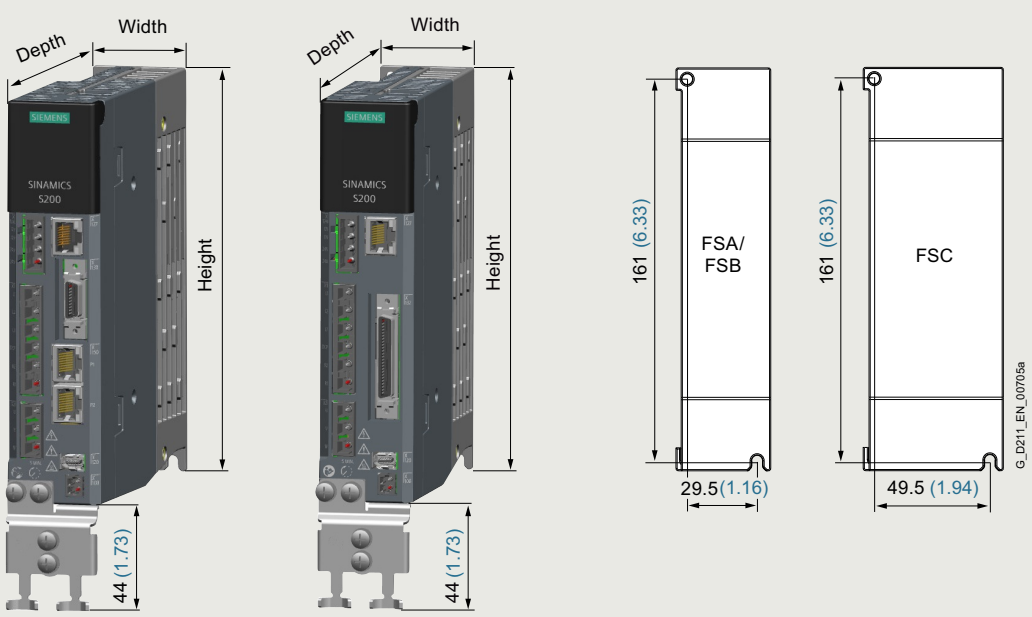

PROFINET version PTI version

Frame size	a (Width)	b (Height)	c (Depth)	Fixing
FSA	40 (1.57)	170 (6.69)	135 (5.31)	2 x M4 / 2.5 Nm
FSB	40 (1.57)	170 (6.69)	170 (6.69)	
FSC	60 (2.36)	170 (6.69)	195 (7.68)	

Dimensions in mm (values in brackets are in inches)

SINAMICS S200 servo converters, FSA to FSC, 200 V 1 AC / 3 AC, IP20

© Siemens 2025

Dimensional drawings

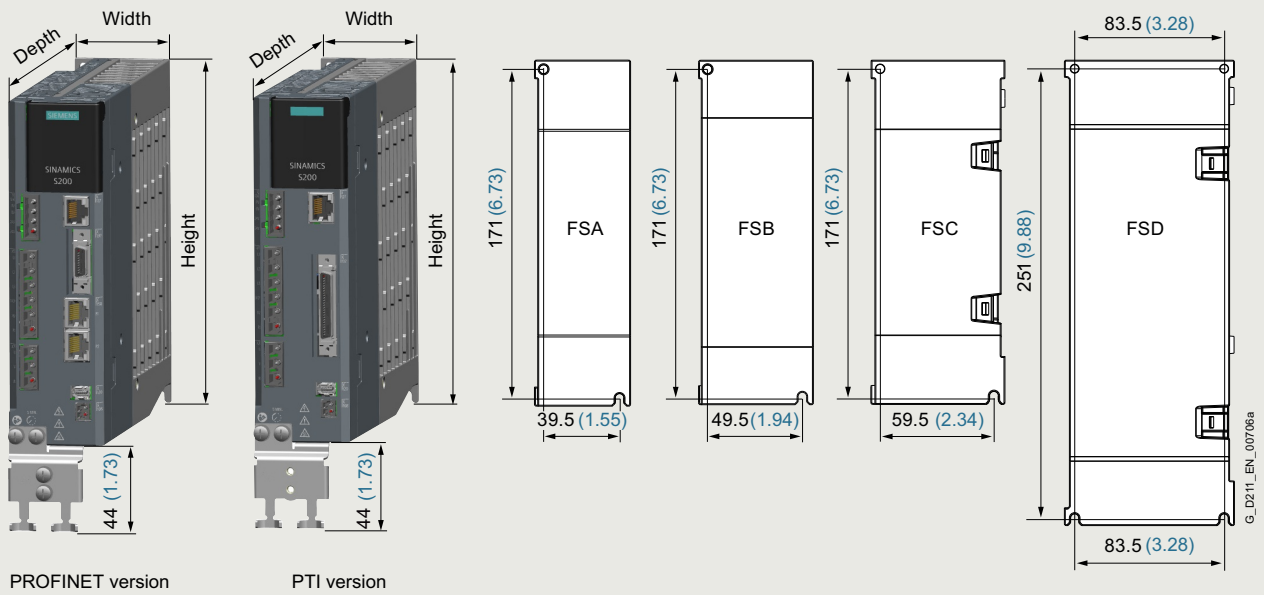

Frame size	a (Width)	b (Height)	c (Depth)	Fixing
FSA	50 (1.97)	180 (7.09)	200 (7.87)	2 x M4 / 2.5 Nm
FSB	60 (2.36)	180 (7.09)	200 (7.87)	
FSC	70 (2.75)	180 (7.09)	200 (7.87)	
FSD	95 (3.74)	260(10.24)	230 (9.05)	4 x M4 / 2.5 Nm

Dimensions in mm (values in brackets are in inches)

SINAMICS S200 servo converters, FSA to FSD, 400 V 3 AC, IP20

More information

Identification link according to IEC 61406 for SINAMICS S200

The ID link contains the article and serial number of the product. As a QR code, it replaces the previous data matrix code on the nameplate and takes you with the URL directly to a product information page on the internet with access to the technical documentation, data sheet, certificates, FAQs, product notifications, and catalogs. Paper package inserts become superfluous since the information is available electronically directly via the QR code, even years later. In this way, we are making a valuable contribution to the preservation of our environment. You don't need an additional app. Simply scan the QR code with your smartphone or tablet. According to IEC 61406, the QR code of an ID link is marked with a frame and a triangle at the bottom right.

With their globally unique identifiers, Siemens products are ready for Industry 4.0.

The ID serves as a connection to the administration shell with which modules of the digital twin can be provided.

Environmental Product Declaration (EPD)

Environmental Product Declarations (EPD) are available as PDFs for this product.
The EPD PDF provides brief and concise information about the ecological properties of a product.

You can find more information on the internet at:
https://support.industry.siemens.com/cs/ww/en/ps/29596/cert?ci=5690

Further documentation, such as the operating instructions, is available free on the internet at:
www.siemens.com/sinamics-s200/documentation

Detailed information on the SINAMICS S200 drive system, including the latest technical documentation (brochures, tutorials, dimensional drawings, certificates, manuals and operating instructions), is available on the internet at:
www.siemens.com/sinamics-s200

and is also available via the Siemens Product Configurator on the internet.
The Siemens Product Configurator can be found in SiePortal at the following address:
www.siemens.com/sinamics-s200/configuration

© Siemens 2025

Overview

Example: Line filter for SINAMICS S200

It is recommended to use a line filter to protect the system from high frequency noise.

With one of the recommended line filters, IEC 61800-3 category C2 can be reached in combination with SINAMICS S200 for motor cable lengths up to 30 m (98.5 ft).

Selection and ordering data

SINAMICS S200 Basic servo converters Frame size	Rated current A	Recommended line filter Category C2 in EN 61800-3 is attainable for motor cable lengths up to 30 m (98.5 ft). Article No.
SINAMICS S200 Basic servo converters		
Line voltage 200 ... 240 V 1 AC		
FSA	18	**6SL5550-0XB21-8CA0**
FSB		
FSC		
Line voltage 200 ... 240 V 3 AC		
FSA	5	**6SL3203-0BE15-0VA0**
FSB		
FSC		
SINAMICS S200 servo converters		
Line voltage 200 ... 240 V 1 AC		
FSA	18	**6SL5550-0XB21-8CA0**
FSB		
FSC		
Line voltage 200 ... 240 V 3 AC		
FSA	5	**6SL3203-0BE15-0VA0**
FSB		
FSC		
Line voltage 380 ... 480 V 3 AC		
FSA	5	**6SL5550-0XE20-5CA0**
FSB		
FSC	12	**6SL5550-0XE21-2CA0**
FSD	20	**6SL5550-0XE22-0CA0**

Technical specifications

Line voltage 200 ... 240 V 1 AC		**Line filter** 6SL5550-0XB21-8CA0	
Rated current	A	18	
Power loss	W	4.7	
Line/load connection		Screw terminals	
• Conductor cross-section - For single-conductor connection - For flexible cables	 mm^2 mm^2	 0.25 ... 6 AWG 24 ... 10 0.25 ... 4 AWG 24 ... 12	
PE connection		M5 screw stud	
Degree of protection		IP20	
Dimensions			
• Width	mm (in)	58 (2.28)	
• Height	mm (in)	155 (6.10)	
• Depth	mm (in)	53 (2.09)	
Weight, approx.	kg (lb)	0.75 (1.65)	
Leakage current	mA	11.84	
Suitable for SINAMICS S200 Basic servo converters	Type	**Pulse Train Input version (PTI)** 200 ... 240 V 1 AC 6SL5610-1BB10-1AA0 (1.2 A) 6SL5610-1BB10-2AA0 (2.0 A) 6SL5610-1BB10-4AA0 (3.0 A) 6SL5610-1BB10-8AA0 (8.0 A) 6SL5610-1BB11-0AA0 (8.0 A)	**PROFINET version** 200 ... 240 V 1 AC 6SL5610-1BB10-1AF0 (1.2 A) 6SL5610-1BB10-2AF0 (2.0 A) 6SL5610-1BB10-4AF0 (3.0 A) 6SL5610-1BB10-8AF0 (8.0 A) 6SL5610-1BB11-0AF0 (8.0 A)
Suitable for SINAMICS S200 servo converters	Type	**Pulse Train Input version (PTI)** 200 ... 240 V 1 AC 6SL5510-1BB10-1AA0 (1.2 A) 6SL5510-1BB10-2AA0 (2.0 A) 6SL5510-1BB10-4AA0 (3.0 A) 6SL5510-1BB10-8AA0 (8.0 A) 6SL5510-1BB11-0AA0 (8.0 A)	**PROFINET version** 200 ... 240 V 1 AC 6SL5510-1BB10-1AF0 (1.2 A) 6SL5510-1BB10-2AF0 (2.0 A) 6SL5510-1BB10-4AF0 (3.0 A) 6SL5510-1BB10-8AF0 (8.0 A) 6SL5510-1BB11-0AF0 (8.0 A)

© Siemens 2025

Technical specifications

Line voltage 275 ... 480 V 3 AC		Line filter			
		6SL3203-0BE15-0VA0	6SL5550-0XE20-5CA0	6SL5550-0XE21-2CA0	6SL5550-0XE22-0CA0
Rated current	A	5	5	12	20
Power loss	W	2	2.7	3.9	10.1
Line/load connection		Screw terminals	Screw terminals	Screw terminals	Screw terminals
• Conductor cross-section					
- For single-conductor connection	mm^2	0.25 ... 6 AWG 24 ... 10	0.25 ... 6 AWG 24 ... 10	0.25 ... 6 AWG 24 ... 10	0.25 ... 6 AWG 24 ... 10
- For flexible cables	mm^2	0.25 ... 4 AWG 24 ... 12	0.25 ... 4 AWG 24 ... 12	0.25 ... 4 AWG 24 ... 12	0.25 ... 4 AWG 24 ... 12
PE connection		M6 screw stud	M6 screw stud	M6 screw stud	M6 screw stud
Degree of protection		IP20	IP20	IP20	IP20
Dimensions					
• Width	mm (in)	55 (2.17)	55 (2.17)	75 (2.95)	60 (2.36)
• Height	mm (in)	170 (6.69)	170 (6.69)	195 (7.68)	250 (9.84)
• Depth	mm (in)	130 (5.12)	130 (5.12)	140 (5.51)	130 (5.12)
Weight, approx.	kg (lb)	0.67 (1.48)	0.72 (1.59)	1.34 (2.95)	1.5 (3.31)
Leakage current	mA	4.31	4.37	7.05	8.88
Suitable for SINAMICS S200 Basic servo converters		**Pulse Train Input version (PTI)**			
	Type	3 AC 200 ... 240 V 6SL5610-1BB10-1AA0 (0.6 A) 6SL5610-1BB10-2AA0 (1.1 A) 6SL5610-1BB10-4AA0 (1.8 A) 6SL5610-1BB10-8AA0 (4.0 A) 6SL5610-1BB11-0AA0 (4.0 A)	–	–	–
		PROFINET version			
	Type	3 AC 200 ... 240 V 6SL5610-1BB10-1AF0 (0.6 A) 6SL5610-1BB10-2AF0 (1.1 A) 6SL5610-1BB10-4AF0 (1.8 A) 6SL5610-1BB10-8AF0 (4.0 A) 6SL5610-1BB11-0AF0 (4.0 A)	–	–	–
Suitable for SINAMICS S200 servo converters		**Pulse Train Input version (PTI)**			
	Type	3 AC 200 ... 240 V 6SL5510-1BB10-1AA0 (0.6 A) 6SL5510-1BB10-2AA0 (1.1 A) 6SL5510-1BB10-4AA0 (1.8 A) 6SL5510-1BB10-8AA0 (4.0 A) 6SL5510-1BB11-0AA0 (4.0 A)	3 AC 380 ... 480 V 6SL5510-1BE10-2AA0 (1.3 A) 6SL5510-1BE10-4AA0 (1.3 A) 6SL5510-1BE10-8AA0 (2.5 A) 6SL5510-1BE11-0AA0 (3.0 A)	3 AC 380 ... 480 V 6SL5510-1BE11-5AA0 (5.5 A) 6SL5510-1BE12-5AA0 (8.0 A)	3 AC 380 ... 480 V 6SL5510-1BE13-5AA0 (11.0 A) 6SL5510-1BE15-0AA0 (13.0 A) 6SL5510-1BE17-0AA0 (14.2 A)
		PROFINET version			
	Type	3 AC 200 ... 240 V 6SL5510-1BB10-1AF0 (0.6 A) 6SL5510-1BB10-2AF0 (1.1 A) 6SL5510-1BB10-4AF0 (1.8 A) 6SL5510-1BB10-8AF0 (4.0 A) 6SL5510-1BB11-0AF0 (4.0 A)	3 AC 380 ... 480 V 6SL5510-1BE10-2AF0 (1.3 A) 6SL5510-1BE10-4AF0 (1.3 A) 6SL5510-1BE10-8AF0 (2.5 A) 6SL5510-1BE11-0AF0 (3.0 A)	3 AC 380 ... 480 V 6SL5510-1BE11-5AF0 (5.5 A) 6SL5510-1BE12-5AF0 (8.0 A)	3 AC 380 ... 480 V 6SL5510-1BE13-5AF0 (11.0 A) 6SL5510-1BE15-0AF0 (13.0 A) 6SL5510-1BE17-0AF0 (14.2 A)

More information

Detailed information on the SINAMICS S200 drive system, including the latest technical documentation (brochures, tutorials, dimensional drawings, certificates, manuals and operating instructions), is available on the internet at:
www.siemens.com/sinamics-s200

and is also available via the Siemens Product Configurator on the internet.
The Siemens Product Configurator can be found in SiePortal at the following address:
www.siemens.com/sinamics-s200/configuration

© Siemens 2025

Overview

Overcurrent protection devices are necessary for the operation of the converters. The following table lists recommendations for fuses.

- Siemens fuses of type 3NA3 and 3NW6 for use in the area of validity of IEC
- UL-listed fuses Class J for use in USA and Canada

Recommendations on further overcurrent protection devices are available at:

- For SINAMICS S200 and SINAMICS S200 Basic
  www.siemens.com/sinamics-s200/ocpd

The Short Circuit Current Rating (SCCR) according to UL for industrial control cabinet installations to NEC Article 409 or UL 508A/508C or UL 61800-5-1 is as follows for Class J fuses for

- SINAMICS S200 and SINAMICS S200 Basic at 240 V 1 AC / 3 AC: 100 kA
- SINAMICS S200 at 480 V 3 AC: 65 kA

SCCR and ICC values for combination with further overcurrent protection devices are available at:

- For SINAMICS S200 and SINAMICS S200 Basic
  www.siemens.com/sinamics-s200/ocpd

Notes for installations in Canada:
The converters are intended for line supply systems with overvoltage category III.
More information is available in the technical documentation on the internet at:
www.siemens.com/sinamics-s200/documentation

Additional information about the listed Siemens fuses is available in Catalog LV 10 as well as in SiePortal.

Selection and ordering data

Rated power	SINAMICS S200 Basic		SINAMICS S200		IEC-compliant		UL/cUL-compliant	
	Pulse Train Input version (PTI)	PROFINET version	Pulse Train Input version (PTI)	PROFINET version	Fuse		Fuse type Rated voltage 600 V AC	
					Current	3NA3 3NW6		Current
kW	Type	Type	Type	Type	A	Article No.	Class	A
Line voltage 200 ... 240 V 1 AC / 3 AC								
0.1	6SL5610-1BB10-1AA0	6SL5610-1BB10-1AF0	6SL5510-1BB10-1AA0	6SL5510-1BB10-1AF0	4	**3NA3804**	J	3
						3NW6304-1	J	3
0.2	6SL5610-1BB10-2AA0	6SL5610-1BB10-2AF0	6SL5510-1BB10-2AA0	6SL5510-1BB10-2AF0	4	**3NA3804**	J	3
						3NW6304-1	J	3
0.4	6SL5610-1BB10-4AA0	6SL5610-1BB10-4AF0	6SL5510-1BB10-4AA0	6SL5510-1BB10-4AF0	6	**3NA3801**	J	6
						3NW6301-1	J	6
0.75	6SL5610-1BB10-8AA0	6SL5610-1BB10-8AF0	6SL5510-1BB10-8AA0	6SL5510-1BB10-8AF0	12	**3NW6006-1**	J	15
					16	**3NA3805**	J	15
1	6SL5610-1BB11-0AA0	6SL5610-1BB11-0AF0	6SL5510-1BB11-0AA0	6SL5510-1BB11-0AF0	12	**3NW6006-1**	J	15
					16	**3NA3805**	J	15
Line voltage 380 ... 480 V 3 AC								
0.2	–	–	6SL5510-1BE10-2AA0	6SL5510-1BE10-2AF0	4	**3NA3804**	J	3
						3NW6304-1	J	3
0.4	–	–	6SL5510-1BE10-4AA0	6SL5510-1BE10-4AF0	4	**3NA3804**	J	3
						3NW6304-1	J	3
0.75	–	–	6SL5510-1BE10-8AA0	6SL5510-1BE10-8AF0	10	**3NA3803**	J	10
						3NW6303-1	J	10
1	–	–	6SL5510-1BE11-0AA0	6SL5510-1BE11-0AF0	10	**3NA3803**	J	10
						3NW6303-1	J	10
1.75	–	–	6SL5510-1BE11-5AA0	6SL5510-1BE11-5AF0	12	**3NW6006-1**	J	15
					16	**3NA3805**	J	15
2.5	–	–	6SL5510-1BE12-5AA0	6SL5510-1BE12-5AF0	16	**3NA3805**	J	20
						3NW6305-1	J	20
3.5	–	–	6SL5510-1BE13-5AA0	6SL5510-1BE13-5AF0	20	**3NA3807**	J	25
						3NW6307-1	J	25
5	–	–	6SL5510-1BE15-0AA0	6SL5510-1BE15-0AF0	20	**3NA3807**	J	25
						3NW6007-1	J	25
7	–	–	6SL5510-1BE17-0AA0	6SL5510-1BE17-0AF0	25	**3NA3810**	J	25
						3NW6010-1	J	25

© Siemens 2025

Overview

If the internal braking resistor cannot meet the braking requirements, an external resistor must be used, which converts the regenerative electrical energy into heat and thus provides significantly improved braking and deceleration capabilities.

When selecting a braking resistor, factors such as load inertia, deceleration time, speed change and braking duration must be taken into account according to the specific application and technology.

Further information is available in the technical documentation on the Internet at:
www.siemens.com/sinamics-s200

© Siemens 2025

Selection and ordering data

Description	Article No.
Connecting cables and connectors for SIMATIC S7 controller and SINAMICS S200 Basic / SINAMICS S200, Pulse Train Input version (PTI)	
Connector for setpoint cable 50-pin MDR connector	**6SL3260-2NA00-0VA0**
Setpoint cable with connector MDR 50-pin connector, free pins to controller side, length: 1 m	**6SL3260-4NA00-1VB0**
Setpoint cable with connectors on both sides and separate terminal block MDR 50-pin connector, terminal block to controller side, length: 0.5 m	**6SL5562-0XX00-0AD0**
Connecting cables and connectors for SIMATIC S7 controller and SINAMICS S200 Basic / SINAMICS S200, PROFINET version	
PROFINET I/O connector 20-pin	**6SL3260-2MA00-0VA0**
PROFINET I/O cable with 20-pin MDR connector, length: 1 m	**6SL5562-1XX00-0AC0**
PROFINET I/O adapter for 20-pin MDR connector	**6SL5562-1XX00-0AD0**
Pre-assembled PROFINET cable with two RJ45 180° plugs, length: 1 m	**6XV1871-5BH10**
RJ45 data plug-in connector with 180° (straight) cable outlet	**6GK1901-1BB10-2AA0**
Standard PROFINET cable 4-core, sold by the meter, not assembled	**6XV1840-2AH10**
PROFINET patch cable For the networking of concatenated converters Industrial Ethernet TP cord, CAT 6 A, twisted pair line 4 × 2 cores, pre-assembled with two RJ45 connectors	
• 0.3 m (0.98 ft)	**6XV1870-3QE30**
• 0.5 m (1.64 ft)	**6XV1870-3QE50**

For further information about PROFINET cables refer on the internet at:
www.siemens.com/simatic-net

© Siemens 2025

Overview

Sample memory card SINAMICS SD card

The parameter assignment, firmware and licenses for a converter can be stored on the SINAMICS SD memory card. When service is required, e.g. after the converter has been replaced and the data have been downloaded from the memory card the drive system is immediately ready for use again.

The memory card has the following functions:

- Parameter settings can be written from the memory card to the converter or saved from the converter to the memory card
- The memory card supports series commissioning without the use of a commissioning tool
- If firmware is stored on the memory card, the firmware can be upgraded/downgraded during startup

Notes:

In general, the converter can be operated without a memory card. However, it is necessary if licenses, such as the Extended Safety license, are required. The card must then remain permanently inserted.

Selection and ordering data

Description	Article No.
SINAMICS SD card 8 GB Parameter assignments, firmware and licenses for a converter can be stored on the memory card.	
• Empty	**6SL5970-0AA00-0AA0**
• With firmware V6.2	**6SL5570-0GC00-0AA0**
• With firmware V6.3	**6SL5570-0GD00-0AA0**
• With firmware V6.4	**6SL5570-0GE00-0AA0**
• With firmware V6.4 and SINAMICS OPC UA Single Extended license [1]	**6SL5570-0GE00-0AA0-Z H80**
SINAMICS UPC UA Single Extended license for SINAMICS S200 [1]	**6SL5977-0AA00-1GA0**
• Certificate of License (CoL) in electronic form	

[1] OPC UA server with information model for inventory management and process data acquisition will be available soon with an V6.4 HF.

© Siemens 2025

Overview

SINAMICS SDI Pro 5.5"

The SINAMICS SDI Pro 5.5" represents a powerful and user-friendly Operator Panel for SINAMICS G220, SINAMICS S200 and SINAMICS S210 (6SL5...)[1]. The SINAMICS SDI Pro 5.5" supports both newcomers and drive experts. Thanks to its touch interface and high-contrast 5.5" color display, it goes hand-in-glove for commissioning, diagnostics, operator control and monitoring as well as on-site maintenance and servicing of converters.

The user interface to the converter is provided by the converter's built-in web server. The technology of the
SINAMICS SDI Pro 5.5" grants full access to the functionality of the web server.
The supported web server functions pertaining to each converter can be found here:

- SINAMICS G220 ⇒ For more information on web server functions, see SINAMICS web server for SINAMICS G220.
- SINAMICS S200 ⇒ For more information on web server functions, see SINAMICS web server for SINAMICS S200.
- SINAMICS S210 (6SL5...)[1]⇒ For more information on web server functions, see SINAMICS web server for SINAMICS S210 (6SL5...).

In addition, the SINAMICS SDI Pro 5.5" offers its own configuration interface with the following settings options:

- SINAMICS SDI Pro 5.5" main menu

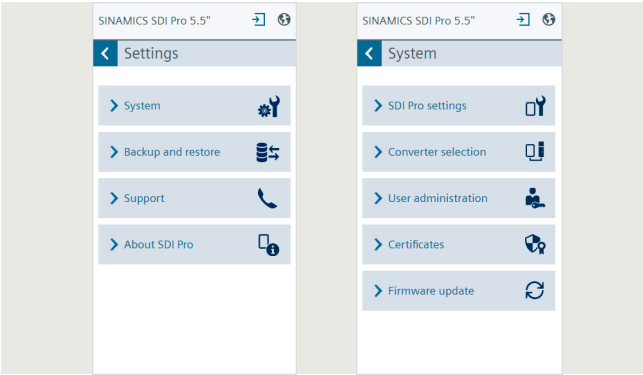

- Set the SINAMICS SDI Pro 5.5" system settings such as user interface language, real-time clock, interface settings, display settings, change background image of the home screen

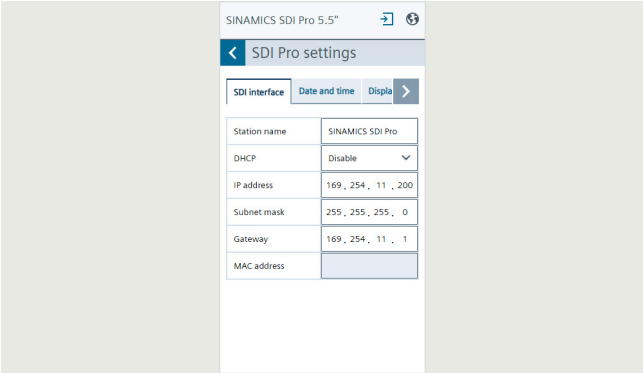

- Back up and restore the SINAMICS SDI Pro 5.5" device settings

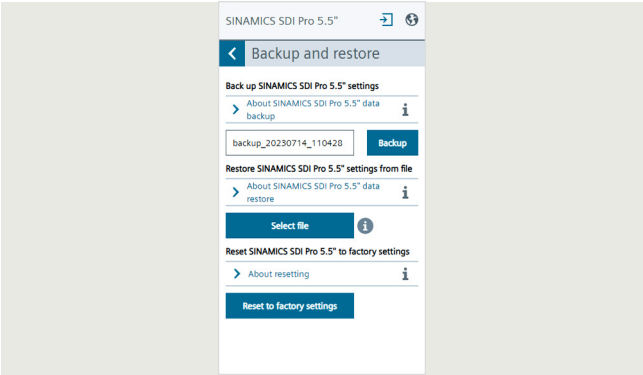

- Access product-specific information (e.g. manuals, downloads, FAQs) and information on SINAMICS SDI Pro 5.5" (e.g. currently installed firmware version, security notifications)

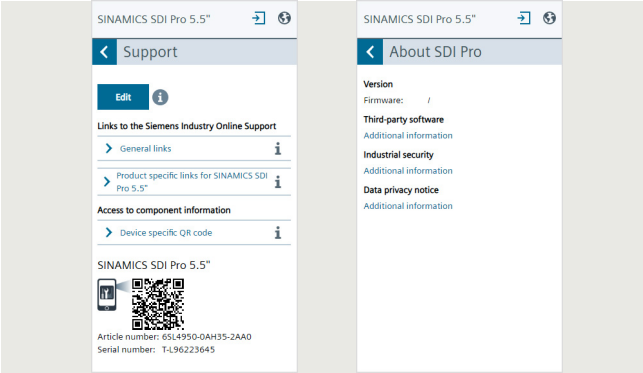

The additionaly available options in the form of the SINAMICS SDI Pro 5.5" handheld kit and
SINAMICS SDI Pro 5.5" door mounting kit extend the operating range of the device. With the SINAMICS SDI Pro 5.5" handheld kit, the device can be equipped with a rubber oversheath for mobile use. The SINAMICS SDI Pro 5.5" door mounting kit enables the SINAMICS SDI Pro 5.5" to be installed in control cabinet doors.

[1] Release for SINAMICS S210 (6SL5...) available soon.

© Siemens 2025

Selection and ordering data

Description	Article No.
SINAMICS SDI Pro 5.5" [2] [4] for use with SINAMICS G220 SINAMICS S200[1] SINAMICS S210 (6SL5...)[1] Operating languages: German, English, French, Italian, Spanish, Chinese Simplified	**6SL4950-0AH35-2AA0**
Accessories	
SINAMICS SDI Pro 5.5'' handheld kit [2] for use with the SINAMICS SDI Pro 5.5" Included in the scope of delivery: • Handheld housing • Ethernet connecting cable Length 3 m (9.84 ft), can be used to connect a SINAMICS SDI Pro 5.5" with a converter	**6SL4950-0AH65-0AA0**
SINAMICS SDI Pro 5.5" door mounting kit [2] for mounting a SINAMICS SDI Pro 5.5" in control cabinet doors with metal thicknesses of 1 ... 3 mm (0.04 ... 0.12 in) Degree of protection IP55 Included in the scope of delivery: • Metal plate for installing the SINAMICS SDI Pro 5.5" • Fixing accessories	**6SL4950-0AH55-0AA0**
SINAMICS IP55 panel mounting frame for SINAMICS G220 Included in the scope of delivery: • SINAMICS IP55 panel mounting frame • Ethernet connecting cable, length approx. 15 cm (5.91 in)	**6SL4950-0AH75-0AA0**
Bundle SINAMICS SDI Pro 5.5'' with SINAMICS IP55 panel mounting frame for SINAMICS G220 Included in the scope of delivery: • SINAMICS SDI Pro 5.5'' • SINAMICS IP55 panel mounting frame • Ethernet connecting cable, length approx. 15 cm (5.91 in)	**6SL4950-0AH45-0AA0**
IE TP Cord RJ45/RJ45 [3] Patch cable, available fully assembled • With 4 x 2 cores for 10/100/1000 Mbps Ethernet • Small cable diameter • Cat6$_A$ (4 x 2) of the ISO/IEC 11801 and EN 50173 international cabling standards	
0.3 m	**6XV1870-3QE30**
0.5 m	**6XV1870-3QE50**
1 m	**6XV1870-3QH10**
2 m	**6XV1870-3QH20**
3 m	**6XV1870-3QH30**
4 m	**6XV1870-3QH40**
6 m	**6XV1870-3QH60**
10 m	**6XV1870-3QN10**
15 m	**6XV1870-3QN15**
20 m	**6XV1870-3QN20**
25 m	**6XV1870-3QN25**
30 m	**6XV1870-3QN30**

1) For information on updates to the SINAMICS SDI Pro 5.5", see www.siemens.com/sinamics-sdi-pro-dl

2) The Ethernet connection cable to connect the SINAMICS SDI Pro 5.5" to the service interface of the converter (X127) or the PROFINET interface (X150) must be ordered separately.
To use the operator panel without an additional power supply at the service interface of the converter (X127; point-to-point connection), an 8-wire RJ45 Ethernet cable is required. Pre-assembled cables can be ordered as an accessory.

3) For applications where the space behind the SINAMICS SDI Pro 5.5'' is very limited, a cable with angled connectors can be used. Such cables can be purchased from HARTING under the order number 09 48 858 5745 050. For information on HARTING cables visit www.harting.com.

4) Release for SINAMICS S210 (6SL5...) available soon.

Benefits

- User interface
  - Intuitive user interface for the drive provided by the converter itself
  - High-contrast 5.5" color touch display
  - SINAMICS SDI Pro 5.5'' device design open for future function expansions (e.g. device functions, languages)
  - Easily upgradable to latest features via USB C interface
- Commissioning
  - Easy commissioning of the connected converter via the Quick/Advanced Commissioning Wizard. Neither variant requires expert knowledge of converter parameters.
  - Quick commissioning gives the user simple and fast access to all the basic parameters required to commission simple applications.
  - Advanced commissioning provides the parameters required to commission more complex applications, dispensing with the need to switch between different areas within the user interface.
  - Fast series commissioning of frequency converters thanks to cloning function (backup/restore)
  - For quicker access right on the SINAMICS SDI Pro 5.5", the names of the backup files you wish to create can be entered or modified with the on-screen keyboard.
  - Context-sensitive help functions provide support for the user during commissioning.
  - Simple local commissioning on-site using the handheld kit
- Operator control and monitoring
  - Simple, individual local drive control (start/stop, setpoint value specification, change in direction of rotation)
  - Actual values from the converter are displayed clearly. You can change the parameters you wish to monitor depending on the requirement.
- Diagnostics
  - Rapid diagnostics thanks to on-site plain text display
  - Integrated plain text help function for local display and resolution of fault messages
- Service and Support function
  - Input/output of a service contact person
  - Easy access to component information via QR code shown on the display
  - Quick access to product information, documentation, FAQs using mobile devices (e.g. smartphones, tablets) by scanning a QR code generated on the SINAMICS SDI Pro 5.5"
  - Optional scanning and evaluation of the QR code with the Industry Online Support app (https://support.industry.siemens.com/cs/ww/en/sc/2067)
  - Simple cloning of specific settings of the SINAMICS SDI Pro 5.5" such as the language setting, backlight timer, date/time settings, interface settings (IP address), list of available converters, user administration of the SDI Pro. Settings made once can thus be transferred easily to many other SINAMICS SDI Pro 5.5" devices.
  - Firmware upgrade for the SINAMICS SDI Pro 5.5"
    The SINAMICS SDI Pro 5.5" can be updated and expanded with the integrated USB C port.
    Data can be transferred from a PC to the device for future expansions. Furthermore, the USB interface allows user languages and firmware updates[1] that will become available in future to be downloaded.
- Management of users allowed to have access to the SINAMICS SDI Pro 5.5" settings (UMAC)
- Management of certificates for encrypted communication to the converter (https)

© Siemens 2025

Integration

- Flexible deployment in point-to-point and network configurations
  - The SINAMICS SDI Pro 5.5" can either be connected to the service interface (X127) or the PROFINET interface (X150) of the converter.
  - The SINAMICS SDI Pro 5.5" can be directly supplied with power via the converter service interface. An external power supply is not required. [1)]
  - If the SINAMICS SDI Pro 5.5" is operated in a network with n converters (1 < n ≤ 20), the converters can be accessed in a flexible way via a drive list. As such, a wide range of converters can be operated or diagnosed via an SINAMICS SDI Pro 5.5", for instance.
    The drive list can be conveniently created on the SINAMICS SDI Pro 5.5" either automatically or manually.

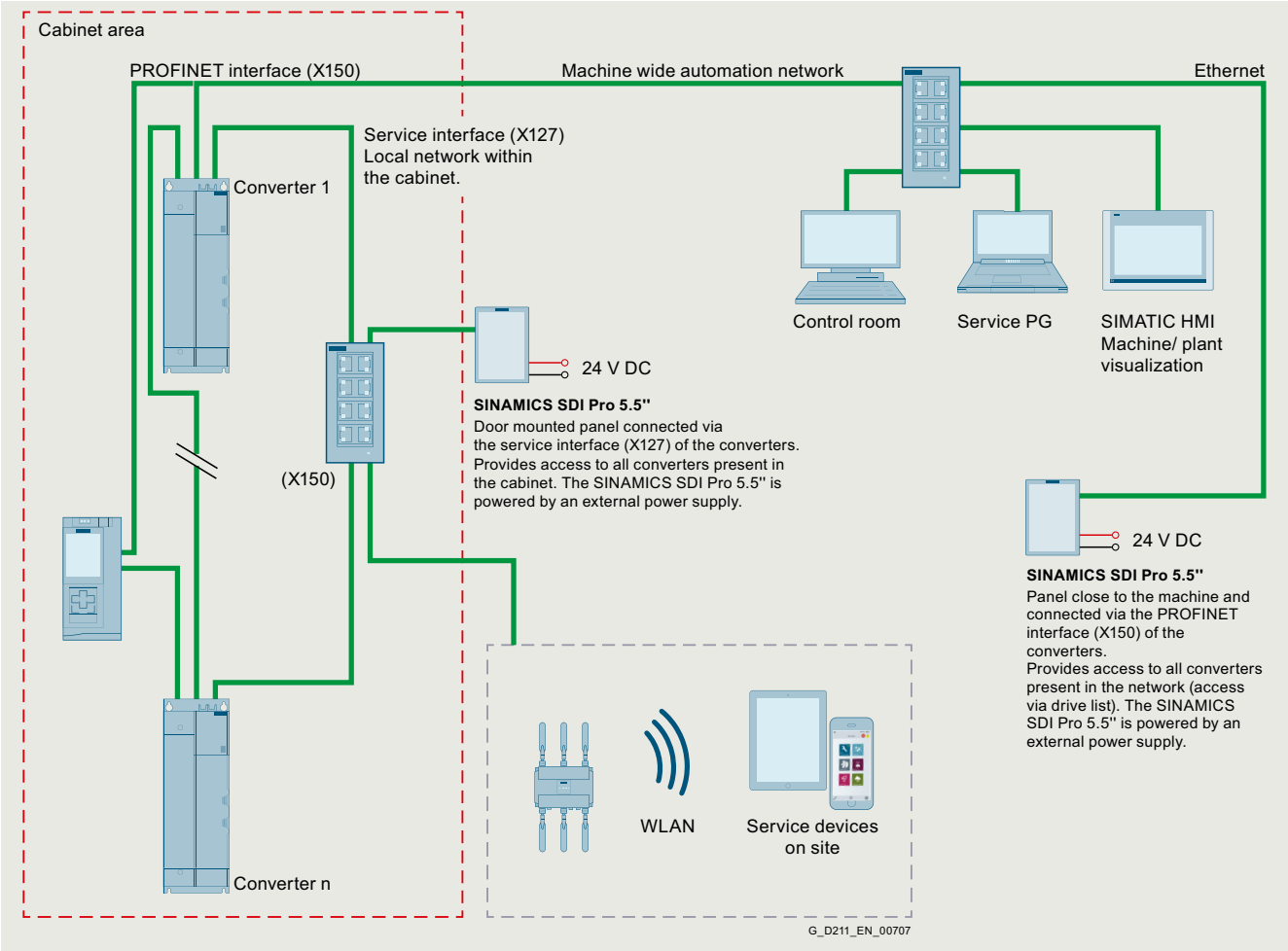

Application example in which multiple converters in a control cabinet can be reached with one SINAMICS SDI Pro 5.5"

[1)] To use the operator panel without an additional power supply at the service interface of the converter (X127; point-to-point connection), an 8-wire RJ45 Ethernet cable is required.
Pre-assembled cables can be ordered as an accessory.

© Siemens 2025

2

Technical specifications

	SINAMICS SDI Pro 5.5" 6SL4950-0AH35-2AA0
Display • Resolution	High-contrast color display 320 × 580 pixels
Operator panel	Touch display
User languages	German, English, French, Italian, Spanish, Chinese Simplified
Power supply	20 ... 29 V DC 24 V DC via the RJ45 (8-core) X127 cable connection from the converter [1] or external power supply via the external power supply terminals on the Operator Panel
Current, max.	300 mA
Ambient temperature • During transport and storage • During operation	 -40 ... +70 °C (-40 ... +158 °F) When using the SINAMICS SDI Pro 5.5" handheld kit: -20 ... +55 °C (-4 ... +131 °F) If installed with the SINAMICS SDI Pro 5.5" door mounting kit: -20 ... +55 °C (-4 ... +131 °F)
Air humidity	Relative air humidity < 95 %, non-condensing
Environmental class/harmful chemical substances • Operation	 Class 3C3 per IEC 60721-3-3: 2002
Degree of protection	IP20 on the rear side or when in use with the SINAMICS SDI Pro 5.5" handheld kit IP55 on the front side, mounted with the SINAMICS SDI Pro 5.5" door mounting kit
Dimensions (H × W × D)	167 mm × 111 mm × 16.1 mm (6.57 in × 4.37 in × 0.63 in)
Weight, approx.	0.275 kg (0.61 lb)
Certificate of suitability	CE, UKCA, RCM, cULus, EAC, KC-REM-S49-SINAMICS

	SINAMICS SDI Pro 5.5" handheld kit 6SL4950-0AH65-2AA0
Ambient temperature • During transport and storage	 -40 ... +70 °C (-40 ... +158 °F)
Air humidity	Relative air humidity < 95 %, non-condensing
Degree of protection	IP20
Weight, approx.	0.265 kg (0.58 lb)

	SINAMICS SDI Pro 5.5" door mounting kit 6SL4950-0AH55-0AA0
Ambient temperature • During transport and storage	 -40 ... +70 °C (-40 ... +158 °F)
Air humidity	Relative air humidity < 95 %, non-condensing
Degree of protection	IP20 on the rear side or inside of the cabinet IP55 on the front side, mounted with the SINAMICS SDI Pro 5.5" door mounting kit
Dimensions • Door mounting kit dimensions	 Cabinet cutout: 93 mm × 153 mm (3.66 in × 6.02 in), Screws: M4 × 20, 6 pcs., Tightening torque: 0.1 Nm (0.89 lbf-in) / M3 × 6, 2 pcs., Tightening torque: 1.2 Nm (10.6 lbf-in)
Weight, approx.	0.214 kg (0.47 lb)

	SINAMICS IP55 Panel mounting frame 6SL4950-0AH75-0AA0
Ambient temperature • During transport and storage	 -40 ... +70 °C (-40 ... +158 °F)
Air humidity	Relative air humidity < 95 %, non-condensing
Degree of protection	IP55, including the SINAMICS SDI Operator Panel
Dimensions • Mounting frame dimensions	 180 mm × 150 mm × 35 mm (7.09 in × 5.91 in × 1.38 in), Screws: M4 × 20, 4 pcs., Tightening torque: 1.2 Nm (10.6 lbf-in)
Weight, approx.	0.405 kg (0.89 lb) + 0.275 kg (0.61 lb) if the SINAMICS SDI Pro Operator Panel is inserted in the mounting frame

[1] The Ethernet connection cable to connect the SINAMICS SDI Pro 5.5" to the service interface of the converter (X127) or the PROFINET interface (X150) must be ordered separately.
To use the operator panel without an additional power supply at the service interface of the converter (X127; point-to-point connection), an 8-wire RJ45 Ethernet cable is required. Pre-assembled cables can be ordered as an accessory.

© Siemens 2025

Accessories

SINAMICS SDI Pro 5.5" handheld kit

SINAMICS SDI Pro 5.5" with handheld kit

A handheld kit can be ordered to assist with using the SINAMICS SDI Pro 5.5" while on the go. It contains a rubber housing and a 3 m long Ethernet connecting cable.

SINAMICS IP55 Panel mounting frame

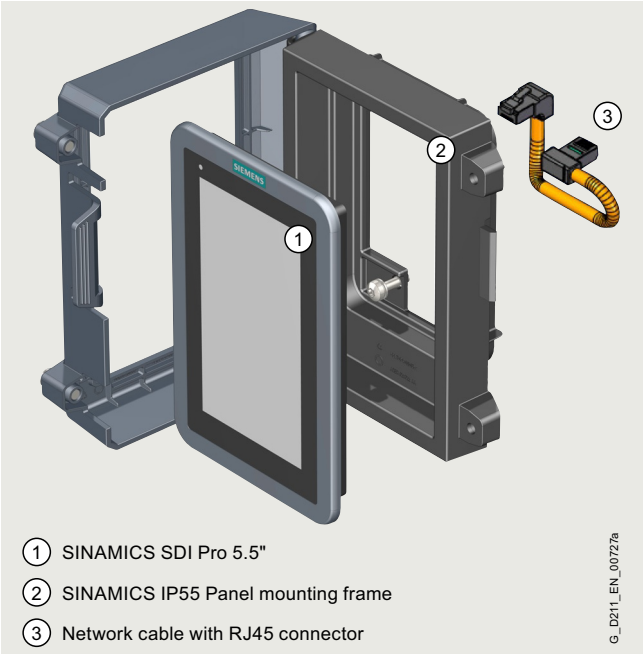

SINAMICS IP55 Panel mounting frame

The SINAMICS IP55 Panel mounting frame is designed so that the SINAMICS SDI Pro Operator Panel can be connected to the IP55 converter while retaining the IP55 degree of protection of the converter.

SINAMICS SDI Pro 5.5" door mounting kit

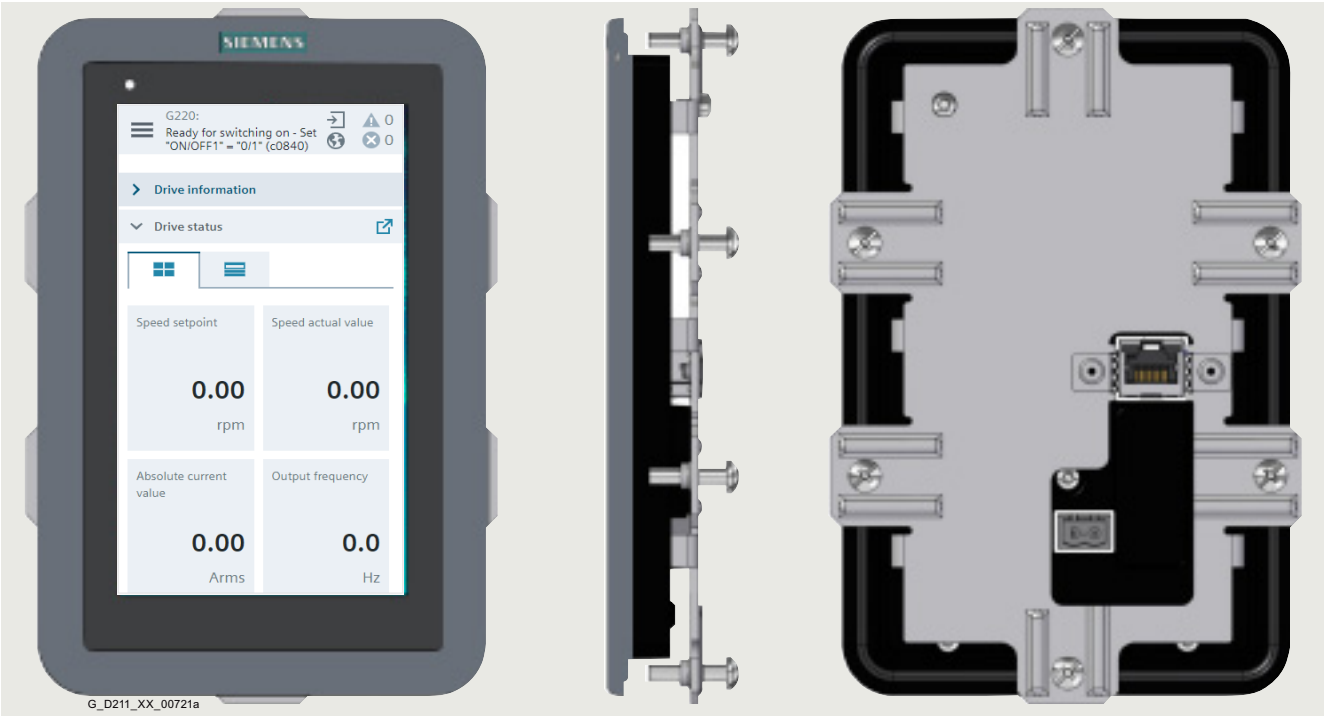

With the optional SINAMICS SDI Pro 5.5" door mounting kit, a SINAMICS SDI Pro 5.5" can be easily installed in a control cabinet door in just a few steps. The door mounting kit includes a metal plate for installing the SINAMICS SDI Pro 5.5" e.g. in a cabinet cutout. [1)]
In case of door mounting with the SINAMICS SDI Pro 5.5" Operator Panel, the degree of protection IP55/UL type 12 enclosure is achieved for the front side.

© Siemens 2025

Overview

SINAMICS Smart Adapter

SINAMICS Smart Adapter is a Wi-Fi solution for engineering, service and maintenance tasks for the next generation of SINAMICS converters SINAMICS S200, SINAMICS S210 (6SL5...) and SINAMICS G220. The adapter is designed to be plugged into and powered from the service interface (X127) on the converter.

Benefits

- Wireless access to the converter-integrated web server via mobile users device
- Wireless access with SINAMICS Startdrive to the SINAMICS converters
- Portable and compact Wi-Fi solution for engineering, service and maintenance tasks for the next generation of SINAMICS converters SINAMICS S200, SINAMICS S210 (6SL5...) and SINAMICS G220
- Advanced security technology
- Plug and Play interface for easy connectivity
- User friendly

Application

SINAMICS Smart Adapter is used in general industrial applications as an engineering solution for quick commissioning and service.

The adapter is especially valuable in areas, which are difficult to access due to their mechanical mounting locations. The use of SINAMICS Smart Adapter avoids cable spaghetti and tripping points during commissioning and service tasks and therefore prevents from occasional accidents.

Function

- Easy and quick service and commissioning via a wireless solution using the converter-integrated web server
- Interface compatible with the the next generation of SINAMICS converters SINAMICS S200, SINAMICS S210 (6SL5...) and SINAMICS G220 and allows power supply of SINAMICS Smart Adapter directly from the converter.
- Advanced security with WPA3 protocol

Integration

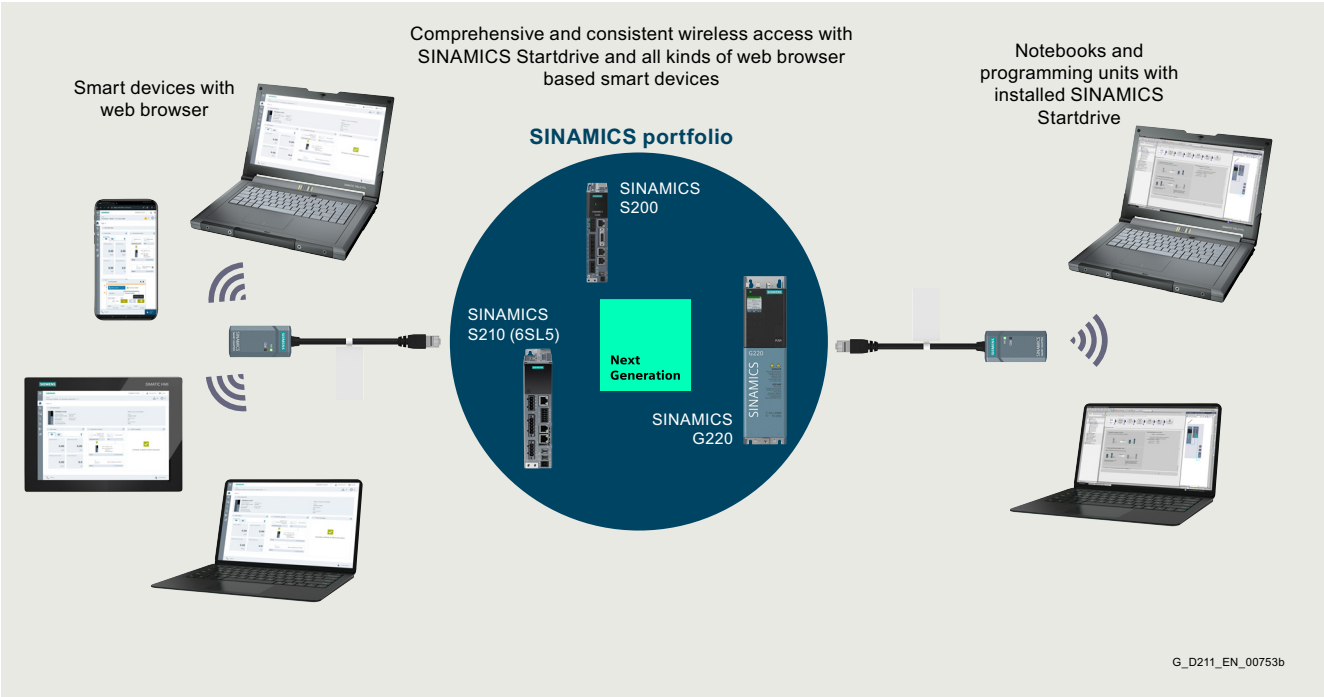

Wireless access with SINAMICS Startdrive via SINAMICS Smart Adapter

© Siemens 2025

Selection and ordering data

Description	Article No.
SINAMICS Smart Adapter Wi-Fi compatible with the next generation of SINAMICS converters SINAMICS S200, SINAMICS S210 (6SL5...) and SINAMICS G220	**6SL4950-0AJ00-0AA0**

Technical specifications

	SINAMICS Smart Adapter **6SL4950-0AJ00-0AA0**
Supported operating systems	Apple iOS (from 12.2), Android, Microsoft Windows, Mac OS (from 10.15)
Recommended browsers	Google Chrome (from 69.0), Microsoft Edge (from 80.0), Safari, Opera (from 56.0)
Ambient temperature • During storage and transport • During operation	 -40 °C ... +70 °C (-40 °F ... +158 °F) -10 °C ... +40 °C (-40 °F ... +104 °F)
Humidity	< 95 %, without condensation
Rated voltage	24 V DC
Wireless technology and frequency range [1] • At 2.4G: • At 5G:	 Wi-Fi 2400 MHz ... 2483.5 MHz Wi-Fi 5150 MHz ... 5250 MHz
Wireless modulation type • At 2.4G: • At 5G:	 802.11 b/g/n 802.11 a/n
Maximum output power (EIRP) • At 2.4G: • At 5G:	 17.66 dBm 14.50 dBm
Type of modulation	DSSS (DBPSK, DQPSK, CCK), OFDM (BPSK, QPSK, 16QAM, 64QAM)
Maximum wireless communication distance	50 m (164 ft)
Maximum antenna gain • At 2.4G: • At 5G:	 1.2 dBi 1.6 dBi
Maximum radio frequency output power • At 2.4G: • At 5G:	 18 dBm 15 dBm
Degree of protection	IP20/UL Open Type
Dimensions • Width • Height • Depth	 30 mm (1.18 in) 200 mm (7.87 in) 18 mm (0.71 in)
Weight, approx.	0.032 kg (0.071 lb)
Compliance with standards	CE, UKCA, UL, CRC, IMDA, NBTC, KCC, NCC, ICASA, SDPPI, UkrCEPRO, JRF, RED, FCC, IC, WPC, ANATEL, TRA, MIC, SRRC, RCM, ENACOM, SUBTEL, MTC, SDOC, MOC

[1] The actual frequency range may vary depending on market.

© Siemens 2025

Shield connection kit

Selection and ordering data

Description	Article No.
Shield connection kit including several shield plates and fixing screws	**6SL5566-0AB00-0AA0**

Terminal kits

Selection and ordering data

Description	Article No.
Terminal kits	
• for SINAMICS S200	**6SL5568-0XX00-0AA0**
• for SINAMICS S200 Basic	**6SL5668-0XX00-0AA0**

Replacement fans

Selection and ordering data

Description	Article No.
Replacement fans	
• for SINAMICS S200, 400 V version, FSC	**6SL5560-0CE00-0AA0**
• for SINAMICS S200, 400 V version, FSD	**6SL5560-0DE00-0AA0**

© Siemens 2025

SIMOTICS S-1FL2 servomotors for SINAMICS S200

3

3/2 Overview
3/2 Benefits
3/2 Application
3/3 Selection and ordering data
3/4 Technical specifications
3/4 General technical specifications
3/9 Shaft height 20
3/11 Shaft height 30
3/14 Shaft height 40
3/17 Shaft height 40 Compact NEW
3/20 Shaft height 45
3/22 Shaft height 48
3/24 Shaft height 52
3/26 Shaft height 65
3/29 Shaft height 90

For **selection and ordering data** please also refer to section "System overview" "SINAMICS S200 servo drive system" from page 1/16.

Detailed technical information on the SINAMICS S200 servo drive system is available on the internet at: www.siemens.com/sinamics-s200/documentation

In addition, the Siemens Product Configurator for the SINAMICS S200 drive system can be used on the internet at the following address: www.siemens.com/sinamics-s200/configuration

In addition, the SIMOTICS S-1FL2 servo motors can be found at the following address in the Siemens Product Configurator in SiePortal: www.siemens.com/simotics-1fl2/configuration

© Siemens 2025

Overview

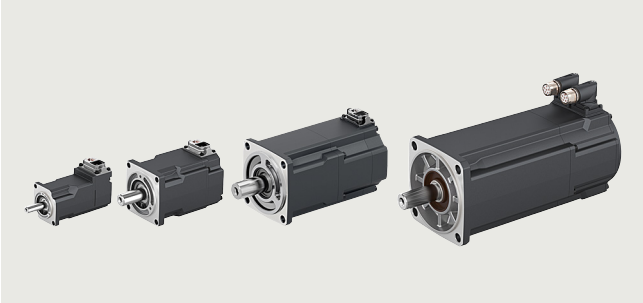

SIMOTICS S-1FL2 Low Inertia servomotors, shaft heights 20, 30, 40 Compact and 52

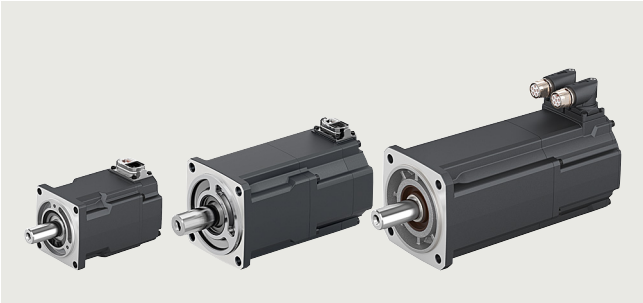

SIMOTICS S-1FL2 Medium Inertia servomotors, shaft heights 30, 40 Compact and 48

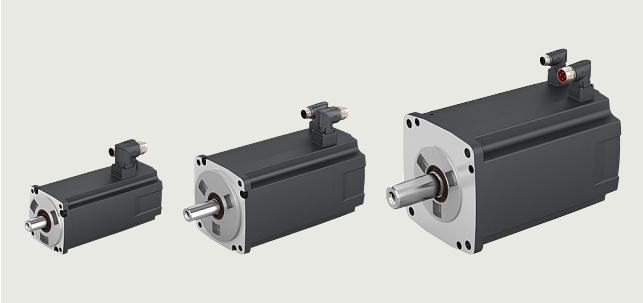

SIMOTICS S-1FL2 High Inertia servomotors, shaft heights 45, 65 and 90

The SIMOTICS S-1FL2 servomotors are compact and highly dynamic synchronous motors for a wide range of uses in an industrial environment. They are characterized by high power density, degree of protection and overload capability.

The 1FL2 servomotors are perfectly suited to overcome the essential challenges in servo drive technology. The product range includes a limited number of variants and options and therefore enables a simple overview and selection. They form the core of the servomotors for the SINAMICS S200 servo drive system.

SIMOTICS S-1FL2 Low Inertia motors

Highest dynamic response through low inertia for highly dynamic applications with low moved masses.

SIMOTICS S-1FL2 Medium Inertia motors

Precise, stable control with medium masses to be moved with medium moment of inertia.

SIMOTICS S-1FL2 High Inertia motors

Precise, stable control with high masses to be moved with high moment of inertia.

Benefits

The SIMOTICS S-1FL2 servomotors fully exploit their strengths in the system with the SINAMICS S200 converter:

- Short adjustment and positioning times
- Quick and precise compensation of disturbances
- Stable closed loop control with high dynamic response

This is achieved by:

- Rapid control cycle
- High pulse frequency
- Complex rule algorithms
- High-resolution optical encoder with fast scanning
- Low moment of inertia of the motors
- High overload capability

Application

- Packaging machines
- Handling equipment
- Feed and withdrawal devices
- Stacking units
- Automatic assembly machines
- Laboratory automation
- Woodworking, glass and ceramic industries

More information

Environmental Product Declaration (EPD)

Environmental Product Declarations (EPD) are available as PDFs for this product. The EPD PDF provides brief and concise information about the ecological properties of a product.

You can find more information on the internet at:
https://support.industry.siemens.com/cs/ww/en/ps/29685/cert?ci=5690

More technical information

Further documentation, such as the operating instructions, is available free on the internet at:
www.siemens.com/sinamics-s200/documentation

Detailed information on the SINAMICS S200 drive system, including the latest technical documentation (brochures, tutorials, dimensional drawings, certificates, manuals and operating instructions), is available on the internet at:
www.siemens.com/sinamics-s200

and is also available via the Siemens Product Configurator on the internet.

Configuration in the Siemens Product Configurator

The Siemens Product Configurator for the SINAMICS S200 drive system can be found in SiePortal at the following address:
www.siemens.com/sinamics-s200/configuration

In addition, the SIMOTICS S-1FL2 servo motors can be found at the following address in the Siemens Product Configurator in SiePortal:
www.siemens.com/simotics-1fl2/configuration

© Siemens 2025

Selection and ordering data

Structure of the Article No. of the SIMOTICS S-1FL2 servomotors

Data position in Article No.		1	2	3	4	5	6	7		8	9	10	11	12		13	14	15	16
		1	**F**	**L**	**2**	■	■	■	-	■	■	■	■	■	-	■	■	■	**0**
1st to 4th position: digit, letter, letter, digit	**Motor**	1	F	L	2														
5th position: digit	**Moment of inertia**																		
	Low Inertia					1													
	Medium Inertia					2													
	High Inertia					3													
5th, 6th and 7th positions: digit, digit, digit	**Shaft height**																		
	20					1	0	2											
	30					1	0	3											
						2	0	3											
	40 and 40 Compact					1	0	4											
						2	0	4											
	45					3	0	4											
	48					2	0	5											
	52					1	0	5											
	65					3	0	6											
	90					3	1	0											
8th position: digit	**Overall length**																		
	See specific technical specifications									0 ... 8									
9th position: letter	Natural cooling										A								
	Natural cooling, Compact (for shaft height 40 Compact) NEW										B								
10th position: letter	**Winding/rated speed**																		
	2000 r/min at 400 V											C							
	3000 r/min at 400 V											F							
	3000 r/min at 200 V											G							
11th position: digit	**Brake**																		
	Without												0						
	Holding brake												1						
12th position: digit	**Degree of protection**																		
	IP54													0					
	IP65 (with shaft sealing ring)													1					
13th position: digit	**Shaft end, feather key**																		
	Plain shaft															0			
	Shaft with feather key (half-key balancing)															1			
14th position: letter	**Encoder**																		
	Absolute encoder 17-bit singleturn																H		
	Absolute encoder 21-bit singleturn																S		
	Absolute encoder 21-bit singleturn + 12-bit multiturn																M		
15th position: letter	**Connection technology**																		
	Metal circular connector																	B	
	Metal hybrid connector																	C	
16th position: digit	Reserved																		0

For selection and ordering data please also refer to section "System overview" "SINAMICS S200 servo drive system" from page 1/16.

Detailed information on the SINAMICS S200 drive system, including the latest technical documentation (brochures, tutorials, dimensional drawings, certificates, manuals and operating instructions), is available on the internet at:
www.siemens.com/sinamics-s200

Configuration in the Siemens Product Configurator

The Siemens Product Configurator for the SINAMICS S200 drive system can be found in SiePortal at the following address:
www.siemens.com/sinamics-s200/configuration

In addition, the SIMOTICS S-1FL2 servo motors can be found at the following address in the Siemens Product Configurator in SiePortal:
www.siemens.com/simotics-1fL2/configuration

© Siemens 2025

Technical specifications

General technical specifications

SIMOTICS S-1FL2 motors – Low Inertia/Medium Intertia/High Inertia	
Motor type	Permanent-magnet synchronous motor
Permissible operating conditions	
• Ambient temperature	-15 ... +40 °C (5 ... 104 °F) without derating +40 ... +60 °C (5 ... 140 °F) with derating For more derating information, see operating instructions online at: www.siemens.com/sinamics-s200/documentation
• Installation altitude, max.	1000 m (3281 ft) without derating > 1000 m ... 5000 m (> 3281 ft ... 16405 ft) with derating For more derating information, see operating instructions online at: www.siemens.com/sinamics-s200/documentation
Relative humidity	90% at 30 °C (86 °F) (no condensation)
Degree of protection According to EN 60034-5 (IEC 60034-5)	
• 1FL2102, 1FL2.03, 1FL2104-.A and 1FL2204-.A	IP54 for the shaft end (without shaft sealing ring) and IP65 for the motor body, optionally IP65 for the whole motor (with shaft sealing ring)
• 1FL2104-.B, 1FL2204-.B, 1FL2.05 and 1FL23..	IP65 (with shaft sealing ring)
Cooling According to EN 60034-6	Natural cooling (IC410)
Type of construction According to EN 60034-7 (IEC 60034-7)	IM B5 (IM V1, IM V3)
Shaft end According to DIN 748-3 (IEC 60072-1)	Plain shaft Optional shaft with feather key (half-key balancing)
Shaft and flange accuracy According to DIN 42955 (IEC 60072-1)	Tolerance N In each case for radial eccentricity of the shaft end, concentricity of the centering ring, and axial eccentricity of the mounting flange to the axis of the shaft end.
Vibration severity grade According to EN 60034-14 (IEC 60034-14)	Grade A is maintained up to rated speed
Stator winding insulation According to EN 60034-1 (IEC 60034-1)	
• 1FL2102, 1FL2.03, 1FL23.., 1FL2104-.B and 1FL2204-.B	Thermal class 130 (B) for a winding overtemperature of ΔT = 80 K
• 1FL2104-.A, 1FL2204-.A and 1FL2.05	Thermal class 155 (F) for a winding overtemperature of ΔT = 100 K
Sound pressure level L_{pA} (1 m), max. According to ISO 1680	
• 1FL2102, 1FL2.03, 1FL2104 and 1FL2204	60 dB(A) +3 dB(A) tolerance
• 1FL2.05 and 1FL2304	65 dB(A) +3 dB(A) tolerance
• 1FL2306 and 1FL2310	70 dB(A) +3 dB(A) tolerance
Encoder system	• Absolute encoder 17-bit singleturn • Absolute encoder 21-bit singleturn • Absolute encoder 21-bit singleturn + 12-bit multiturn
Holding brake	Optional integrated holding brake
Connection	
• 1FL2102, 1FL2.03, 1FL2104 and 1FL2204	Double line with a metal hybrid connector
• 1FL2.05	Two cable connections with two metal circular connectors
• 1FL23..	Three cable connections with three metal circular connectors
Paint finish	RAL 7016 (anthracite gray)
Certificates of suitability	CE, UKCA, cURus, EAC

© Siemens 2025

Technical specifications

Regulations, standards, specifications

The motors comply with the appropriate standards and regulations, see table below.

As a result of the fact that in many countries the national regulations have been completely harmonized with the international IEC 60034-1 recommendation, there are no longer any differences with respect to coolant temperatures, temperature classes and temperature rise limits.

General specifications for rotating electrical machines	IEC 60034-1
Terminal designations and direction of rotation for electrical machines	IEC 60034-8
Types of construction of rotating electrical machines	IEC 60034-7
Cooling methods of rotating electrical machines	IEC 60034-6
Degrees of protection of rotating electrical machines	IEC 60034-5
Vibration severity of rotating electrical machines	IEC 60034-14
Noise limit values for rotating electrical machines	IEC 60034-9
Cylindrical shaft ends for electrical machines	DIN 748-3/IEC 60072-1

SIMOTICS S-1FL2 motors have UL approval from Underwriters Laboratories Inc. and are marked with the "UL Recognized Component" test symbol. This is used for components which are part of a larger product or system. This confirmed compliance with the corresponding US American and Canadian regulations, and allowed access to the North American market.

For SIMOTICS S-1FL2 motors, conformity with the relevant EC Directives 2006/95/EC and 2014/35/EU and the relevant standards EN 60034-1:2010, EN 60204-1:2006 is confirmed. By applying the CE mark to the product, Siemens AG confirms this for the product, and secures the free movement of goods within the European Union..

The UKCA (UK Conformity Assessed) marking is a new product marking that will be used for products being placed on the market in Great Britain (England, Wales and Scotland). It covers most products which previously required a CE marking.

The UKCA marking is mandatory for deliveries to the UK starting January 1, 2023.

The marking is typically applied to motors with a second nameplate bearing the UKCA label.

China Energy Label

The SIMOTICS S-1FL2 motors meet the China Energy Label Grade 2 according to GB 30253-2013. Particularly noteworthy is the fact that SIMOTICS S-1FL2 motors in the shaft height 40 Compact also meet the China Energy Label Grade 1.

Degree of protection acc. to IEC 60034-5

A suitable degree of protection must be selected according to the operating and environmental conditions to protect the motor against damage caused by the ingress of water and other liquids, as well as dust and foreign bodies.

SIMOTICS S-1FL2 motors in the 1FL2102, 1FL2.03, 1FL2104-.A and 1FL2204-.A versions are produced concerning the shaft end with the IP54 degree of protection as standard (no shaft sealing ring) and in IP65 for the motor body, optionally in IP65 for the entire motor (with shaft sealing ring).

SIMOTICS S-1FL2 motors in the 1FL2104-.B, 1FL2204-.B, 1FL2.05 and 1FL23.. versions are produced as standard with a radial shaft seal ring in degree of protection IP65. This increases the protection against the ingress of liquids.

The degree of protection designation is composed from the code IP (for International Protection) and two code numbers for the protection against touching and penetration of foreign bodies, and the degree of protection against the ingress of water.

First code number

6: Protection against dust ingress and complete protection against touching

Second code number

4: Protection against splashwater from any direction

5: Protection against jet water from any direction

Recommended degrees of protection for three-phase motors

When cooling lubricants are used, protection against water alone is inadequate. The IP rating should only be considered as a guide value in this case. The motors may have to be protected by suitable covers. Attention must be paid to providing suitable sealing of the motor shaft for the selected degree of protection for the motor.

The following table can serve as a decision aid for selecting the proper degree of protection for motors. A permanent covering of liquid on the flange must be avoided when the motor is mounted with the shaft end facing upwards (IM V3).

Effect	General workshop environment	Water/ general cooling lubricant (95 % water, 5 % oil)
Dry	IP64	–
Humid/moist environment	–	IP64
Mis	–	IP65
Spraying water	–	IP65

© Siemens 2025

Technical specifications

Type of construction, mounting position according to IEC 60034-7

SIMOTICS S-1FL2 motors are designed in type of construction IM B5. They may also be used in mounting positions IM V1 and IM V3.

Code 1	IM B5	IM V1	IM V3
Code 2	IM 3001	IM 3011	IM 3031
	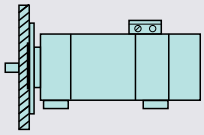	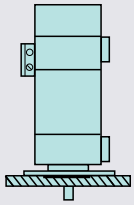	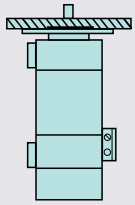
	Horizontal flange mounting	Flange mounting, output shaft pointing vertically downwards	Flange mounting, output shaft pointing vertically upwards

Shaft and flange accuracy in accordance with IEC 60072-1

Radial eccentricity tolerance of shaft in relation to housing axis

(referred to cylindrical shaft ends)

Motor	Shaft end D × L mm (in)	Radial eccentricity tolerance N µm
1FL2102	8 × 25 (0.31 × 0.98)	30
1FL2.03	14 × 30 (0.55 × 1.18)	35
1FL2104	19 × 40 (0.75 × 1.57)	40
1FL2204		
1FL2105	19 × 45 (0.75 × 1.77)	
1FL2205	19 × 40 (0.75 × 1.57)	
1FL2304	19 × 35 (0.75 × 1.38)	
1FL2306	22 × 58 (0.87 × 2.28)	
1FL2310	35 × 80 (1.38 × 3.15)	50

Concentricity and axial eccentricity tolerance of the flange surface for the shaft axis

(referred to the centering diameter of the mounting flange)

Motor	Centering diameter mm (in)	Concentricity and axial eccentricity Tolerance N µm
1FL2102	30 (1.18)	60
1FL2.03	50 (1.97)	80
1FL2104	70 (2.76)	
1FL2204		
1FL2105	95 (3.74)	
1FL2205	80 (3.15)	
1FL2304	80 (3.15)	
1FL2306	110 (4.33)	100
1FL2310	114.3 (4.50)	

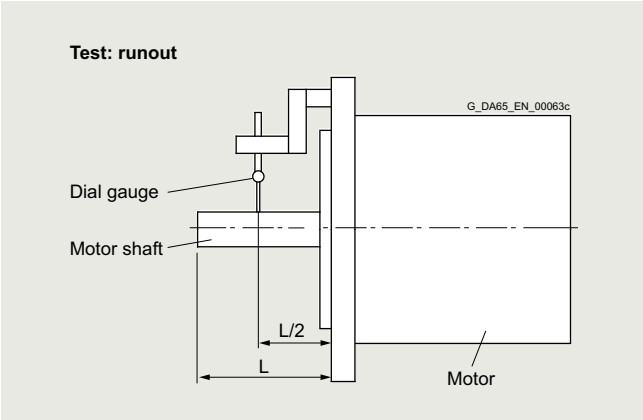

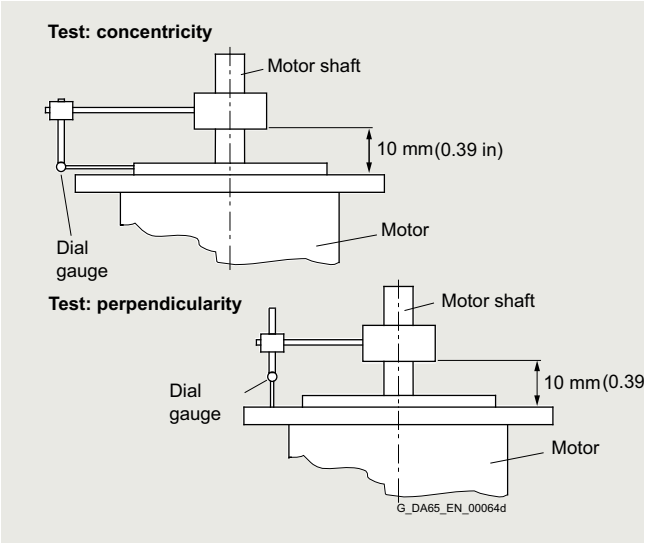

© Siemens 2025

Technical specifications

Vibration severity and vibration severity grade A according to IEC 60034-14

The vibration severity is the RMS value of the vibration velocity (frequency range from 10 Hz to 2000 Hz). The vibration severity is measured using electrical measuring devices according to DIN 45666.

The specified values refer only to the motor. These values can increase as a result of the overall system vibrational behavior due to installation.

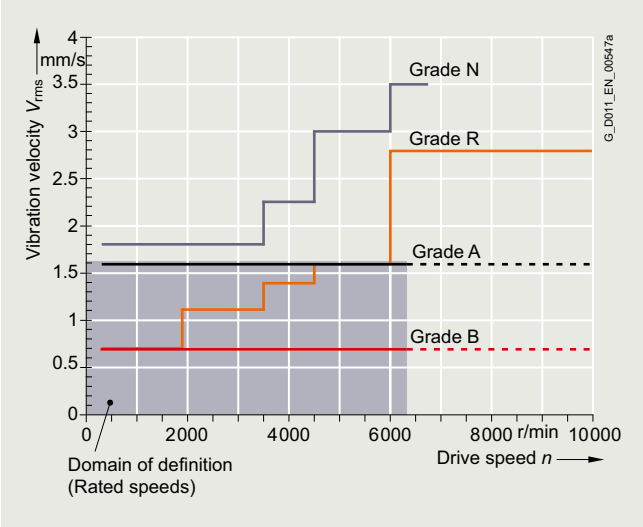

Vibration severity limit values

The speeds of 1800 r/min and 3600 r/min and the associated limit values are specified according to IEC 60034-14.

The speeds of 4500 r/min and 6000 r/min and the specified values are defined by the motor manufacturer.

The motors maintain vibration severity grade A up to the rated speed.

Balancing according to ISO 21940-32

Apart from the balance quality of the motor, the vibrational quality of motors with attached belt pulleys is mainly determined by the balance state of the mounted component. If the motor and the mounted component are balanced separately before being joined, the balancing process of the belt pulley is to be adapted to the motor's balancing type.

SIMOTICS S-1FL2 motors with feather keys are always half-key balanced. In general, motors with a plain shaft are recommended for systems with the most stringent vibrational quality requirements.

Vibration stress, immitted vibration values

The requirements of environmental class 3M8 (according to EN 60721-3-3 Table 6) must be maintained for proper function and safeguard the bearing life. The following limits are valid for (immitted) vibration values introduced into the motor from outside:

- For Low Inertia and Medium Inertia:
  - Vibration velocity V_{rms} according to ISO 10816, max. 4.5 mm/s (0.18 in/s)
  - Vibration acceleration a_{peak} axial and radial 50 m/s^2 (164 ft/s^2)
- For High Inertia:
  - Vibration velocity V_{rms} according to ISO 10816, max. 4.5 mm/s (0.18 in/s)
  - Vibration acceleration a_{peak} axial 25 m/s2 (82 ft/s2) and a_{peak} radial 50 m/s^2 (164 ft/s^2)

During transport, the motors withstand single shocks (6 ms) of up to 250 m/s2 (820 ft/s^2).

Ambient temperature and installation altitude

Operating range without restrictions:

Temperature range from -15 °C to +40 °C (5 °F to 104 °F), installation altitude up to 1000 m (3281 ft).

If deviating conditions are encountered, the S1 characteristic of the motor must be adapted with regard to speed and torque.

Use the following equation to calculate the reduced S1 characteristic:

$S1_{red}(n) = x_D \times S1_{40\,°C\,(104\,°F);\,1000\,m\,(3281\,ft)}(n/x_D)$

Installation altitude above sea level	Derating factor x_D at an ambient temperature of			
m (ft)	30 °C (86 °F)	40 °C (104 °F)	45 °C (113 °F)	50 °C (122 °F)
1000 (3281)	1.08	1.00	0.96	0.91
2000 (6562)	1.02	0.93	0.89	0.84
3000 (9843)	0.95	0.86	0.81	0.75
4000 (13124)	0.88	0.77	0.72	0.66
5000 (16405)	0.80	0.68	0.62	0.55

Encoder systems

Singleturn absolute encoder

This encoder outputs an absolute angular position between 0° and 360° in the specified resolution. In contrast to the multiturn absolute encoder, it does not have a revolution counter, and can therefore only supply the position value within one revolution. It does not have a traversing range.

Multiturn absolute encoder

This encoder outputs an absolute angular position between 0° and 360° in the specified resolution. It can also count 4096 revolutions. So with a ball screw, for example, the absolute position of the slide can be determined over a longer distance.

14th position in the Article No. of the motor	Designation
1FL2 ...-.....-.**H**..	Absolute encoder 17-bit singleturn (resolution 131072)
1FL2 ...-.....-.**S**..	Absolute encoder 21-bit singleturn (resolution 2097152)
1FL2 ...-.....-.**M**..	Absolute encoder 21-bit singleturn + 12-bit multiturn (resolution 2097152, traversing range 4096 revolutions)

© Siemens 2025

Technical specifications

Holding brake

Many drives need a holding brake with an EMERGENCY STOP function for safety reasons or to meet process requirements. The brakes used on SIMOTICS S-1FL2 motors operate on the quiescent current principle. A spring or permanent magnet exerts a tensile force on the brake armature disk, i.e. in a state of zero current, the brake is closed and the motor shaft thereby stopped.

An electric current that flows through a coil generates an opposing field that counteracts the force effect of the spring or permanent magnet and releases or holds open the brake. Only a limited number of braking operations can be performed for an EMERGENCY STOP or power failure without causing excessive wear on the holding brake. The holding brake is not an operational brake. Regular dynamic braking leads to increased wear and premature brake failure. In order to ensure the functionality and specification of the brake, neither the total operating energy nor the maximum switching energy per braking operation may be exceeded.

The brake control is already fully integrated into the SINAMICS S200 converter system, so that an external circuit is not necessary.

After an EMERGENCY STOP sequence with the maximum single switching energy, a cooling time of at least 3 minutes is required.

The following table contains technical specifications of the holding brakes for operating on SINAMICS S200 converters.

Motor	Shaft height	Holding torque	Dynamic braking torque	Opening time	Closing time	Maximum permissible single switching energy	Total operating energy (service life)	Holding current
		Nm (lbf-ft)	Nm (lbf-ft)	ms	ms	J	kJ	A
1FL2102	20	0.32 (0.24)	0.32 (0.24)	35	10	1	2	< 1
1FL2.03	30	1.3 (0.96)	1.3 (0.96)	60	10	10	20	< 1
1FL2104 1FL2204	40, 40 Compact	3.3 (2.43)	3.3 (2.43)	100	15	43	86	< 1
1FL2105	52	8 (5.90)	5 (3.69)	90	25	142	284	< 1
1FL2205	48	8 (5.90)	5 (3.69)	90	25	142	284	< 1
1FL2304	45	3.5 (2.58)	3.5 (2.58)	60	45	140	280	< 2
1FL2306	65	12 (8.85)	12 (8.85)	180	60	600	1200	< 2
1FL2310	90	30 (22.1)	30 (22.1)	220	115	1100	2200	< 2

[1] Typical values at an ambient temperature of 20 °C.
At -15 °C, the opening currents can increase by up to 30 %.

© Siemens 2025

Technical specifications

SIMOTICS S-1FL2 shaft height 20

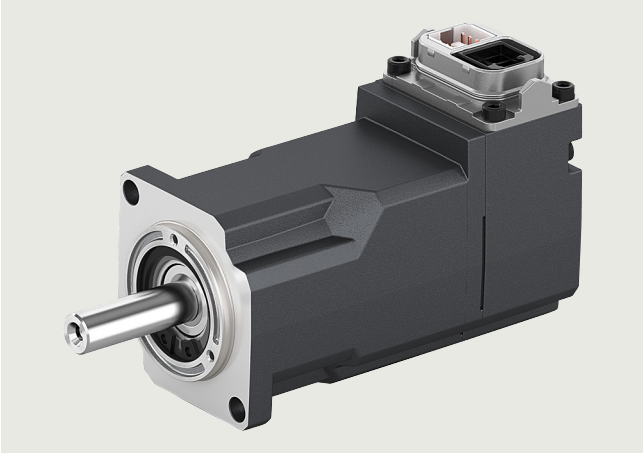

Specific technical specifications

SIMOTICS S-1FL2 servomotors		Low Inertia			
Shaft height 20		**1FL2102-2AG**	**1FL2102-2AF**	**1FL2102-4AG**	**1FL2102-4AF**
Static torque M_0	Nm (lb_f-ft)	0.16 (0.12)	0.16 (0.12)	0.32 (0.24)	0.32 (0.24)
Stall current I_0	A	0.81	0.84	0.76	0.81
Maximum torque M_{max}	Nm (lb_f-ft)	0.56 (0.41)	0.56 (0.41)	1.12 (0.83)	1.12 (0.83)
Maximum current I_{max}	A	3.1	3.4	2.95	2.9
Maximum speed n_{max}	r/min	6500	6500	6500	6500
Rotor moment of inertia J_{Mot}	kg cm^2 (lb_f-in^2)	0.017 (0.01)	0.017 (0.01)	0.029 (0.01)	0.029 (0.01)
Moment of inertia (with brake) $J_{Mot\ Br}$	kg cm^2 (lb_f-in^2)	0.022 (0.01)	0.022 (0.01)	0.034 (0.01)	0.034 (0.01)
Weight m_{Mot}	kg (lb)	0.29 (0.64)	0.29 (0.64)	0.39 (0.86)	0.38 (0.84)
Weight (with brake) $m_{Mot\ Br}$	kg (lb)	0.46 (1.01)	0.45 (0.99)	0.56 (1.23)	0.55 (1.21)
200 ... 240 V 1 AC / 3 AC					
Rated speed n_N	r/min	3000	–	3000	–
Rated torque M_N	Nm (lb_f-ft)	0.16 (0.12)	–	0.32 (0.24)	–
Rated current I_N	A	0.81	–	0.76	–
Rated power P_N	W	50	–	100	–
380 ... 480 V 3 AC					
Rated speed n_N	r/min	–	3000	–	3000
Rated torque M_N	Nm (lb_f-ft)	–	0.16 (0.12)	–	0.32 (0.24)
Rated current I_N	A	–	0.84	–	0.81
Rated power P_N	W	–	50	–	100
Suitable for servo converters					
• SINAMICS S200 Basic		6SL5610-	–	6SL5610-	–
- 200 ... 240 V 1 AC – Pulse Train Input (PTI)		1BB10-1AA0	–	1BB10-1AA0	–
- 200 ... 240 V 1 AC – PROFINET (PN)		1BB10-1AF0	–	1BB10-1AF0	–
- 200 ... 240 V 3 AC – Pulse Train Input (PTI)		1BB10-1AA0	–	1BB10-1AA0	–
- 200 ... 240 V 3 AC – PROFINET (PN)		1BB10-1AF0	–	1BB10-1AF0	–
• SINAMICS S200		6SL5510-	6SL5510-	6SL5510-	6SL5510-
- 200 ... 240 V 1 AC – Pulse Train Input (PTI)		1BB10-1AA0	–	1BB10-1AA0	–
- 200 ... 240 V 1 AC – PROFINET (PN)		1BB10-1AF0	–	1BB10-1AF0	–
- 200 ... 240 V 3 AC – Pulse Train Input (PTI)		1BB10-1AA0	–	1BB10-1AA0	–
- 200 ... 240 V 3 AC – PROFINET (PN)		1BB10-1AF0	–	1BB10-1AF0	–
- 380 ... 480 V 3 AC – Pulse Train Input (PTI)		–	1BE10-2AA0	–	1BE10-2AA0
- 380 ... 480 V 3 AC – PROFINET (PN)		–	1BE10-2AF0	–	1BE10-2AF0

© Siemens 2025

SIMOTICS S-1FL2 shaft height 20

Technical specifications

Dimensional drawing

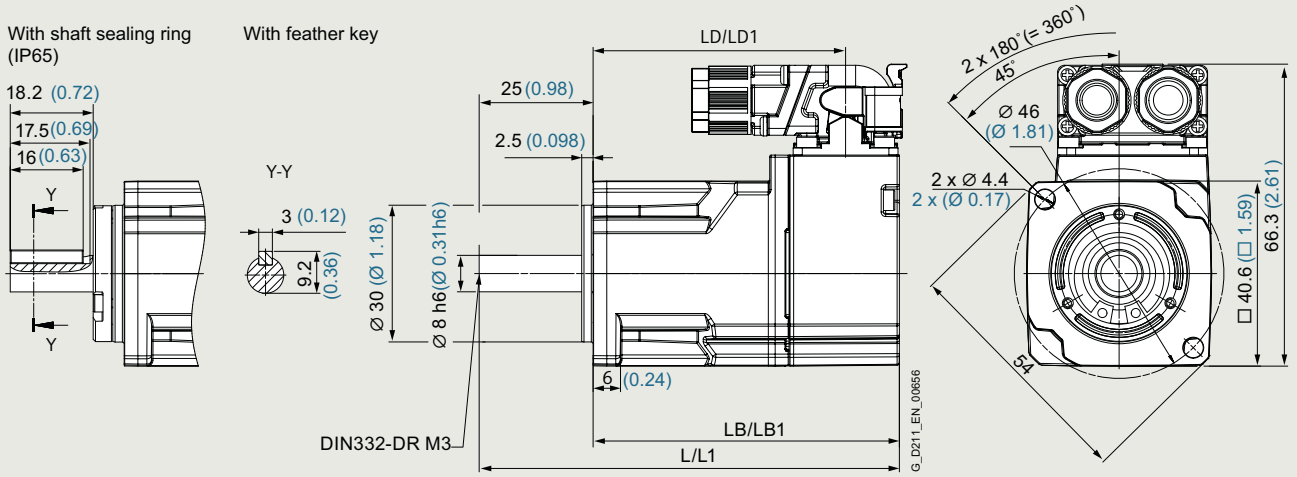

SIMOTICS S-1FL2 Shaft height 20	Motor length					
	Without brake			With brake		
	L	LB	LD	L1	LB1	LD1
1FL2102-2	92.2 (3.63)	67.2 (2.64)	55.7 (2.19)	121.9 (4.8)	96.9 (3.81)	85.4 (3.36)
1FL2102-4	105.2 (4.14)	80.2 (3.16)	68.7 (2.7)	134.9 (5.31)	109.9 (4.33)	98.4 (3.87)

Dimensions in mm (values in brackets are in inches)

Speed/torque characteristics

Low Inertia

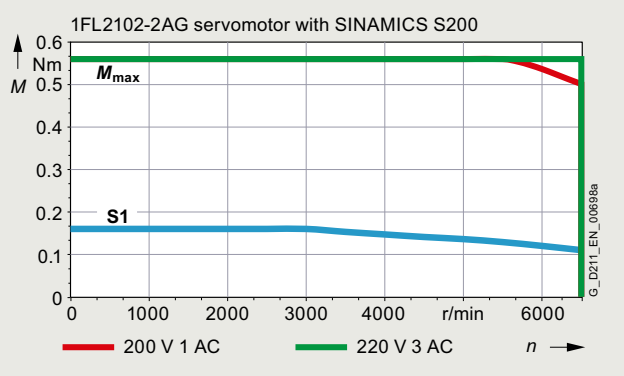

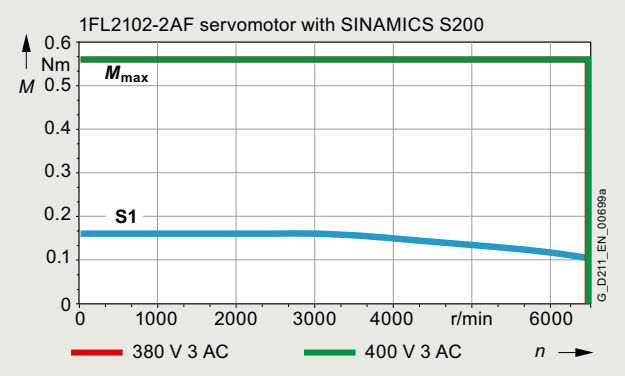

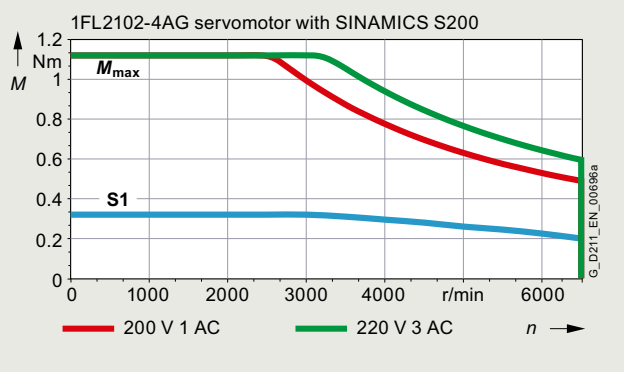

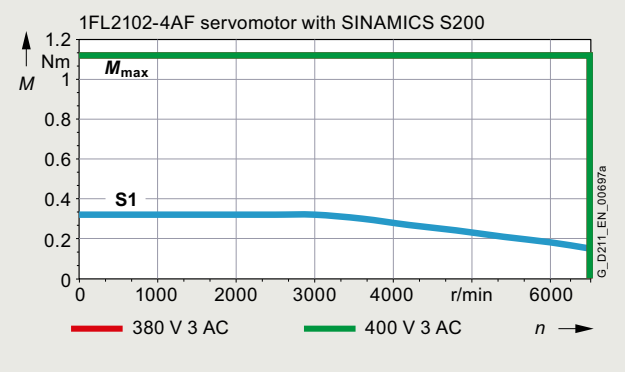

© Siemens 2025

Technische Daten

SIMOTICS S-1FL2 shaft height 30

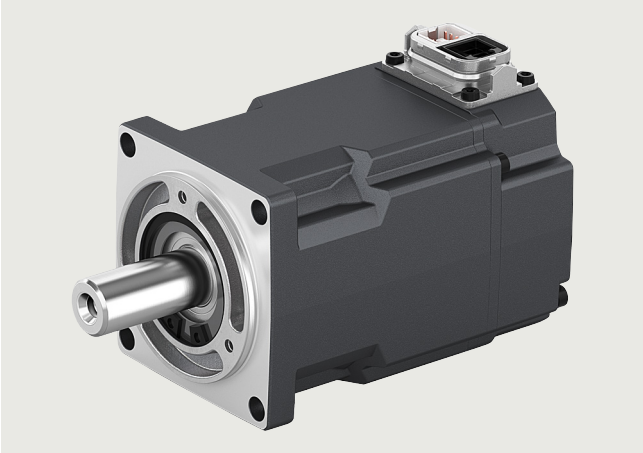

Specific technical specifications

SIMOTICS S-1FL2 servomotors		Low Inertia				Medium Inertia			
Shaft height 30		**1FL2103-2AG**	**1FL2103-2AF**	**1FL2103-4AG**	**1FL2103-4AF**	**1FL2203-2AG**	**1FL2203-2AF**	**1FL2203-4AG**	**1FL2203-4AF**
Static torque M_0	Nm (lb_f-ft)	0.64 (0.47)	0.64 (0.47)	1.27 (0.94)	1.27 (0.94)	0.64 (0.47)	0.64 (0.47)	1.27 (0.94)	1.27 (0.94)
Stall current I_0	A	1.28	1.3	2.4	1.3	1.33	1.3	2.4	1.3
Maximum torque M_{max}	Nm (lb_f-ft)	2.24 (1.65)	2.24 (1.65)	4.45 (3.28)	4.45 (3.28)	2.24 (1.65)	2.24 (1.65)	4.45 (3.28)	4.45 (3.28)
Maximum current I_{max}	A	4.8	4.8	8.7	4.8	4.8	4.8	8.7	4.8
Maximum speed n_{max}	r/min	6500	6500	6500	6500	6500	6500	6500	6500
Rotor moment of inertia J_{Mot}	kg cm^2 (lb_f-in^2)	0.08 (0.03)	0.08 (0.03)	0.155 (0.05)	0.155 (0.05)	0.18 (0.06)	0.18 (0.06)	0.35 (0.12)	0.35 (0.12)
Moment of inertia (with brake) $J_{Mot\ Br}$	kg cm^2 (lb_f-in^2)	0.11 (0.04)	0.11 (0.04)	0.185 (0.06)	0.185 (0.06)	0.21 (0.07)	0.21 (0.07)	0.38 (0.13)	0.38 (0.13)
Weight m_{Mot}	kg (lb)	0.79 (1.74)	0.78 (1.72)	1.16 (2.56)	1.14 (2.51)	0.76 (1.68)	0.77 (1.70)	1.11 (2.45)	1.09 (2.40)
Weight (with brake) $m_{Mot\ Br}$	kg (lb)	1.14 (2.51)	1.12 (2.47)	1.5 (3.31)	1.49 (3.29)	1.11 (2.45)	1.12 (2.47)	1.46 (3.22)	1.44 (3.18)
200 ... 240 V 1 AC / 3 AC									
Rated speed n_N	r/min	3000	–	3000	–	3000	–	3000	–
Rated torque M_N	Nm (lb_f-ft)	0.64 (0.47)	–	1.27 (0.94)	–	0.64 (0.47)	–	1.27 (0.94)	–
Rated current I_N	A	1.28	–	2.4	–	1.33	–	2.4	–
Rated power P_N	W	200	–	400	–	200	–	400	–
380 ... 480 V 3 AC									
Rated speed n_N	r/min	–	3000	–	3000	–	3000	–	3000
Rated torque M_N	Nm (lb_f-ft)	–	0.64 (0.47)	–	1.27 (0.94)	–	0.64 (0.47)	–	1.27 (0.94)
Rated current I_N	A	–	1.3	–	1.3	–	1.3	–	1.3
Rated power P_N	W	–	200	–	400	–	200	–	400
Suitable for servo converters									
• SINAMICS S200 Basic		6SL5610-	–	6SL5610-	–	6SL5610-	–	6SL5610-	–
- 200 ... 240 V 1 AC – Pulse Train Input (PTI)		1BB10-2AA0	–	1BB10-4AA0	–	1BB10-2AA0	–	1BB10-4AA0	–
- 200 ... 240 V 1 AC – PROFINET (PN)		1BB10-2AF0	–	1BB10-4AF0	–	1BB10-2AF0	–	1BB10-4AF0	–
- 200 ... 240 V 3 AC – Pulse Train Input (PTI)		1BB10-2AA0	–	1BB10-4AA0	–	1BB10-2AA0	–	1BB10-4AA0	–
- 200 ... 240 V 3 AC – PROFINET (PN)		1BB10-2AF0	–	1BB10-4AF0	–	1BB10-2AF0	–	1BB10-4AF0	–
• SINAMICS S200		6SL5510-	6SL5510-	6SL5510-	6SL5510-	6SL5510-	6SL5510-	6SL5510-	6SL5510-
- 200 ... 240 V 1 AC – Pulse Train Input (PTI)		1BB10-2AA0	–	1BB10-4AA0	–	1BB10-2AA0	–	1BB10-4AA0	–
- 200 ... 240 V 1 AC – PROFINET (PN)		1BB10-2AF0	–	1BB10-4AF0	–	1BB10-2AF0	–	1BB10-4AF0	–
- 200 ... 240 V 3 AC – Pulse Train Input (PTI)		1BB10-2AA0	–	1BB10-4AA0	–	1BB10-2AA0	–	1BB10-4AA0	–
- 200 ... 240 V 3 AC – PROFINET (PN)		1BB10-2AF0	–	1BB10-4AF0	–	1BB10-2AF0	–	1BB10-4AF0	–
- 380 ... 480 V 3 AC – Pulse Train Input (PTI)		–	1BE10-2AA0	–	1BE10-4AA0	–	1BE10-2AA0	–	1BE10-4AA0
- 380 ... 480 V 3 AC – PROFINET (PN)		–	1BE10-2AF0	–	1BE10-4AF0	–	1BE10-2AF0	–	1BE10-4AF0

© Siemens 2025

SIMOTICS S-1FL2 shaft height 30

Technical specifications

Dimensional drawing

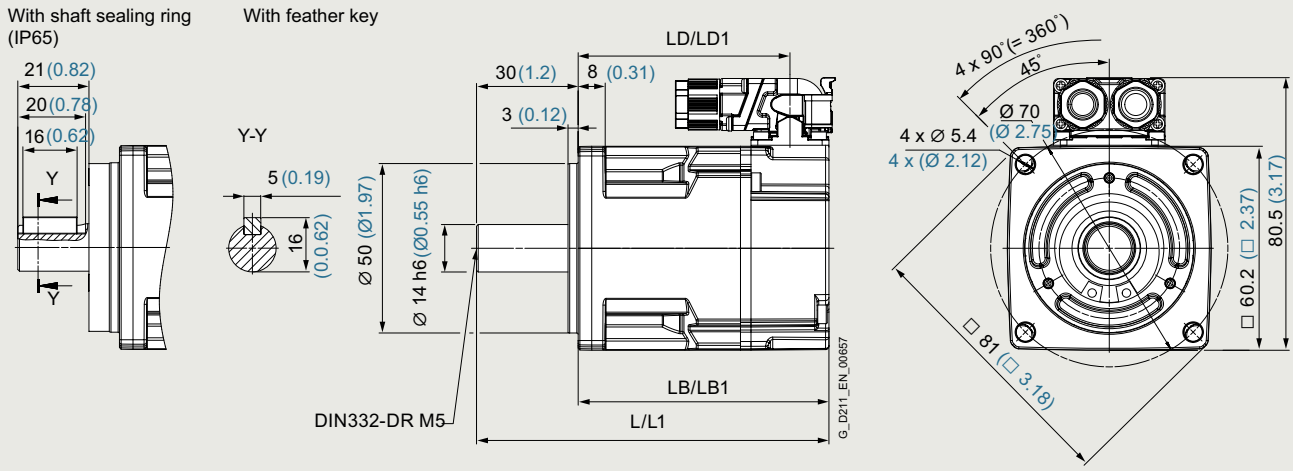

SIMOTICS S-1FL2 Shaft height 30	Motor length					
	Without brake			With brake		
	L	LB	LD	L1	LB1	LD1
1FL2103-2	105.5 (4.15)	75.5 (2.97)	63.8 (2.51)	135.5 (5.33)	105.5 (4.15)	93.8 (3.69)
1FL2103-4	124.5 (4.90)	94.5 (3.72)	82.8 (3.26)	154.5 (6.08)	124.5 (4.90)	112.8 (4.44)
1FL2203-2	104 (4.09)	74 (2.91)	62.3 (2.45)	134 (5.27)	104 (4.09)	92.3 (3.63)
1FL2203-4	121.5 (4.78)	91.5 (3.6)	79.8 (3.14)	151.5 (5.96)	121.5 (4.78)	109.8 (4.32)

Dimensions in mm (values in brackets are in inches)

Speed/torque characteristics

Low Inertia

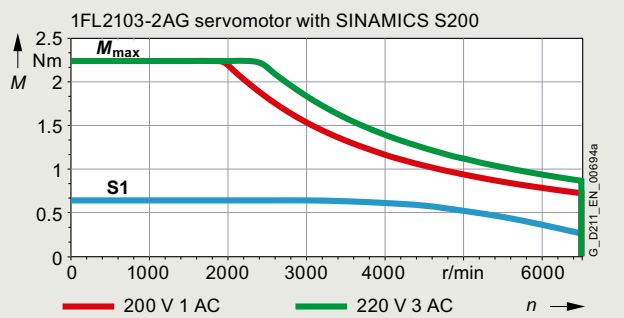

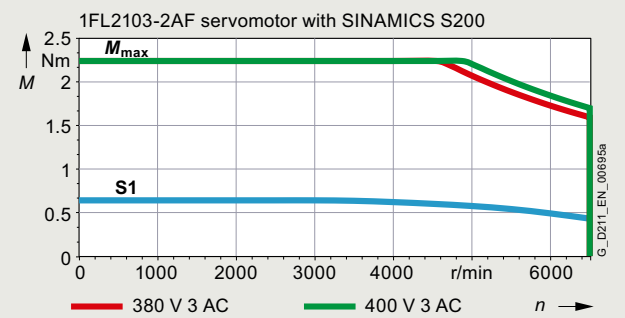

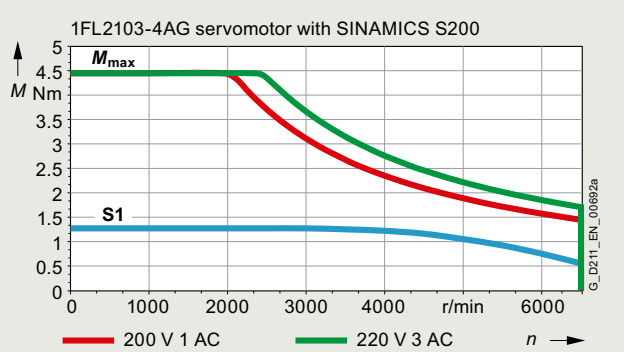

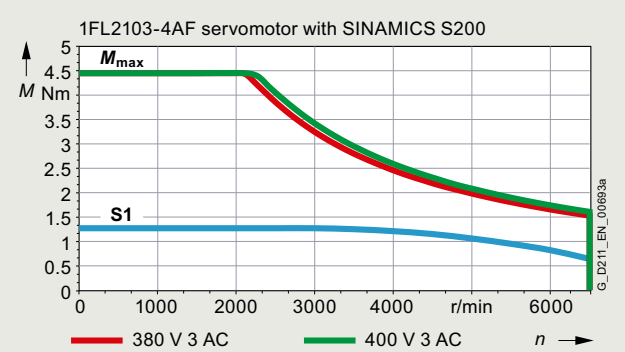

© Siemens 2025

Technische Data

Medium Inertia

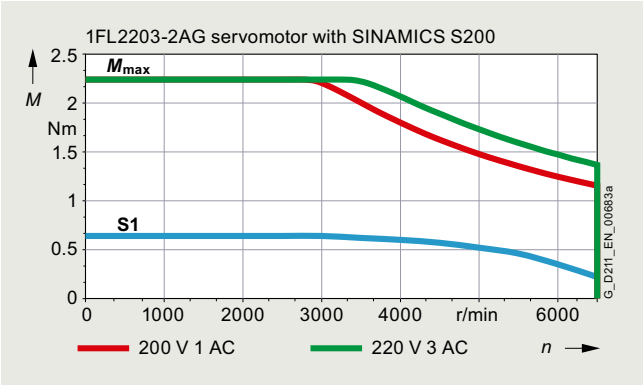

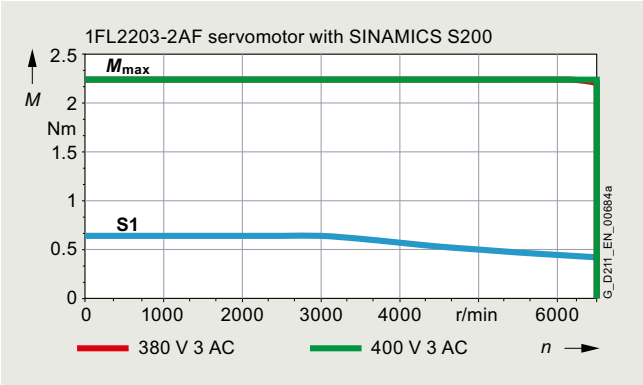

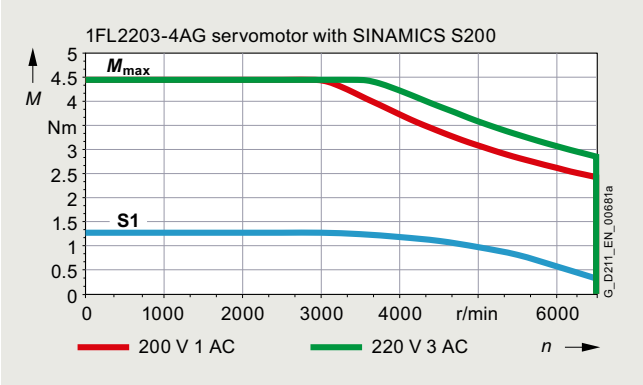

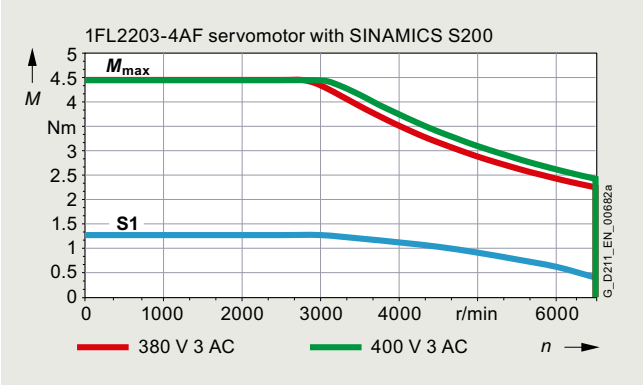

© Siemens 2025

SIMOTICS S-1FL2 shaft height 40

Technical specifications

SIMOTICS S-1FL2 shaft height 40

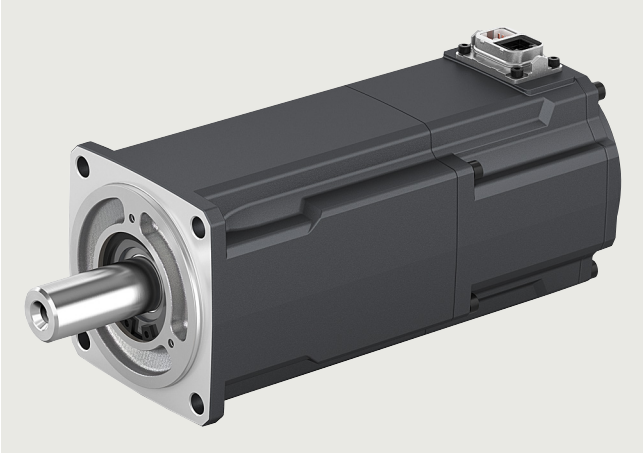

Specific technical specifications

SIMOTICS S-1FL2 servomotors		Low Inertia				Medium Inertia			
Shaft height 40		**1FL2104-2AG**	**1FL2104-2AF**	**1FL2104-4AG**	**1FL2104-4AF**	**1FL2204-2AG**	**1FL2204-2AF**	**1FL2204-4AG**	**1FL2204-4AF**
Static torque M_0	Nm (lb_f-ft)	2.4 (1.77)	2.4 (1.77)	3.2 (2.36)	3.2 (2.36)	2.4 (1.77)	2.4 (1.77)	3.2 (2.36)	3.2 (2.36)
Stall current I_0	A	4.4	2.1	4.4	3	4.4	2.25	4.4	3
Maximum torque M_{max}	Nm (lb_f-ft)	8 (5.90)	8 (5.90)	10.8 (7.97)	10.8 (7.97)	7.5 (5.53)	7.5 (5.53)	11.3 (8.33)	10 (7.38)
Maximum current I_{max}	A	16	7.6	16	10.9	14.2	7.1	16	9.9
Maximum speed n_{max}	r/min	6500	6500	6500	6500	6500	6500	6500	6500
Rotor moment of inertia J_{Mot}	kg cm^2 (lb_f-in^2)	0.5 (0.17)	0.5 (0.17)	0.63 (0.22)	0.63 (0.22)	1.23 (0.42)	1.23 (0.42)	1.61 (0.55)	1.61 (0.55)
Moment of inertia (with brake) $J_{Mot\ Br}$	kg cm^2 (lb_f-in^2)	0.58 (0.20)	0.58 (0.20)	0.71 (0.24)	0.71 (0.24)	1.31 (0.45)	1.31 (0.45)	1.69 (0.58)	1.69 (0.58)
Weight m_{Mot}	kg (lb)	2.7 (5.95)	2.7 (5.95)	3.3 (7.28)	3.3 (7.28)	2.6 (5.73)	2.6 (5.73)	3.1 (6.84)	3.1 (6.84)
Weight (with brake) $m_{Mot\ Br}$	kg (lb)	3.5 (7.72)	3.5 (7.72)	4.1 (9.04)	4.1 (9.04)	3.4 (7.50)	3.4 (7.50)	3.9 (8.60)	3.9 (8.60)
200 ... 240 V 1 AC / 3 AC									
Rated speed n_N	r/min	3000	–	3000	–	3000	–	3000	–
Rated torque M_N	Nm (lb_f-ft)	2.4 (1.77)	–	3.2 (2.36)	–	2.4 (1.77)	–	3.2 (2.36)	–
Rated current I_N	A	4.4	–	4.4	–	4.4	–	4.4	–
Rated power P_N	W	750	–	1000	–	750	–	1000	–
380 ... 480 V 3 AC									
Rated speed n_N	r/min	–	3000	–	3000	–	3000	–	3000
Rated torque M_N	Nm (lb_f-ft)	–	2.4 (1.77)	–	3.2 (2.36)	–	2.4 (1.77)	–	3.2 (2.36)
Rated current I_N	A	–	2.1	–	3	–	2.25	–	3
Rated power P_N	W	–	750	–	1000	–	750	–	1000
Suitable for servo converters									
• SINAMICS S200 Basic		6SL5610-	–	6SL5610-	–	6SL5610-	–	6SL5610-	–
- 200 ... 240 V 1 AC – Pulse Train Input (PTI)		1BB10-8AA0	–	1BB11-0AA0	–	1BB10-8AA0	–	1BB11-0AA0	–
- 200 ... 240 V 1 AC – PROFINET (PN)		1BB10-8AF0	–	1BB11-0AF0	–	1BB10-8AF0	–	1BB11-0AF0	–
- 200 ... 240 V 3 AC – Pulse Train Input (PTI)		1BB10-8AA0	–	1BB11-0AA0	–	1BB10-8AA0	–	1BB11-0AA0	–
- 200 ... 240 V 3 AC – PROFINET (PN)		1BB10-8AF0	–	1BB11-0AF0	–	1BB10-8AF0	–	1BB11-0AF0	–
• SINAMICS S200		6SL5510-	6SL5510-	6SL5510-	6SL5510-	6SL5510-	6SL5510-	6SL5510-	6SL5510-
- 200 ... 240 V 1 AC – Pulse Train Input (PTI)		1BB10-8AA0	–	1BB11-0AA0	–	1BB10-8AA0	–	1BB11-0AA0	–
- 200 ... 240 V 1 AC – PROFINET (PN)		1BB10-8AF0	–	1BB11-0AF0	–	1BB10-8AF0	–	1BB11-0AF0	–
- 200 ... 240 V 3 AC – Pulse Train Input (PTI)		1BB10-8AA0	–	1BB11-0AA0	–	1BB10-8AA0	–	1BB11-0AA0	–
- 200 ... 240 V 3 AC – PROFINET (PN)		1BB10-8AF0	–	1BB11-0AF0	–	1BB10-8AF0	–	1BB11-0AF0	–
- 380 ... 480 V 3 AC – Pulse Train Input (PTI)		–	1BE10-8AA0	–	1BE11-0AA0	–	1BE10-8AA0	–	1BE11-0AA0
- 380 ... 480 V 3 AC – PROFINET (PN)		–	1BE10-8AF0	–	1BE11-0AF0	–	1BE10-8AF0	–	1BE11-0AF0

© Siemens 2025

Technical specifications

Dimensional drawing

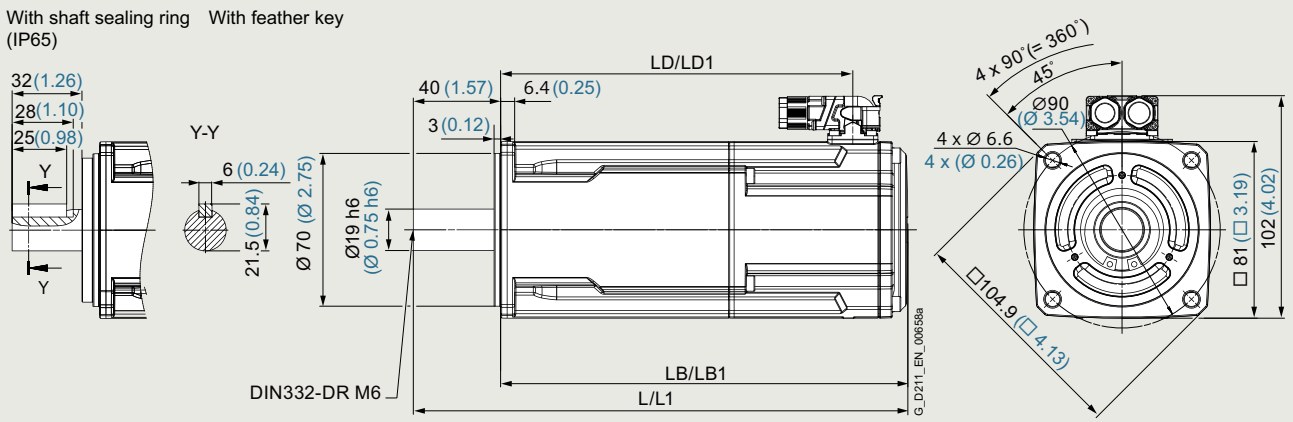

SIMOTICS S-1FL2 Shaft height 40	Motor length					
	Without brake			With brake		
	L	LB	LD	L1	LB1	LD1
1FL2104-2A	164.6 (6.48)	124.6 (4.91)	99.4 (2.51)	208.6 (8.21)	168.6 (6.64)	143.4 (5.65)
1FL2204-2A						
1FL2104-4A	182.6 (7.19)	142.6 (5.61)	117.4 (4.62)	226.6 (8.92)	186.6 (7.35)	161.4 (6.35)
1FL2204-4A						

Dimensions in mm (values in brackets are in inches)

Speed/torque characteristics

Low Inertia

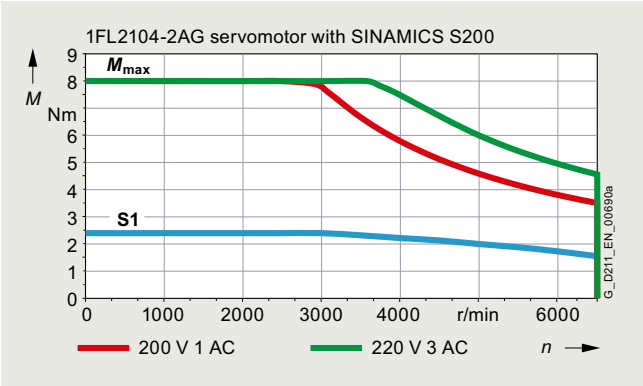

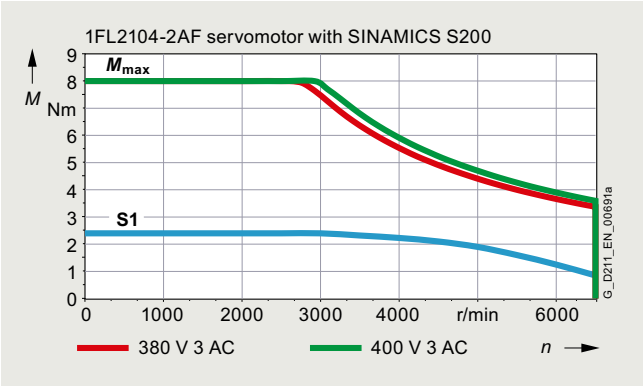

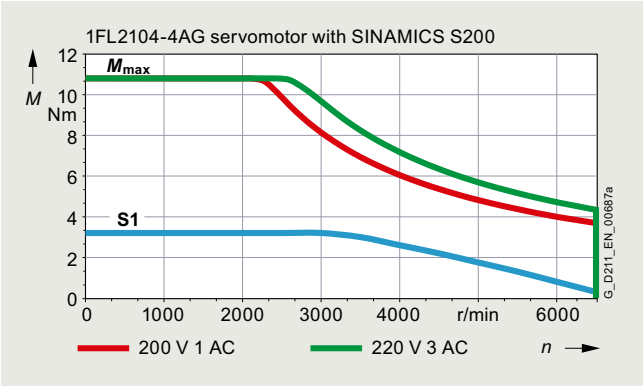

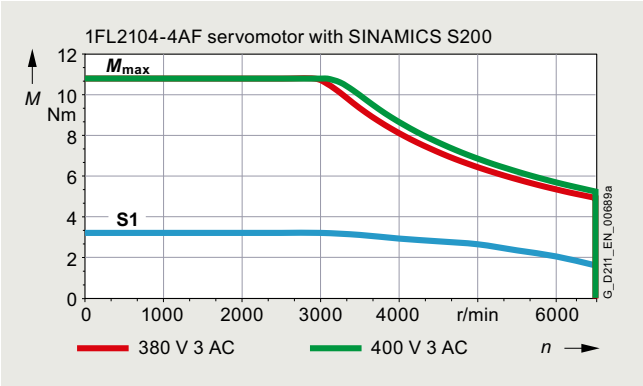

© Siemens 2025

Technical specifications

Medium Inertia

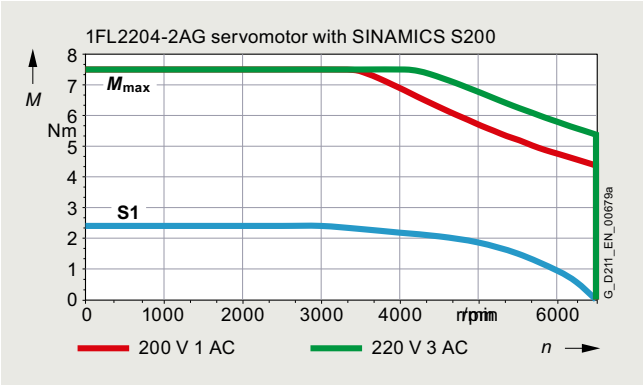

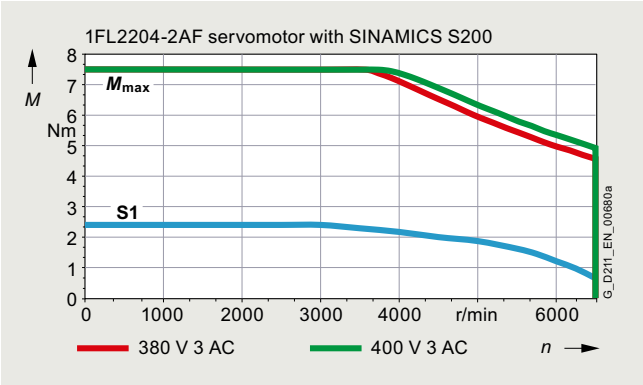

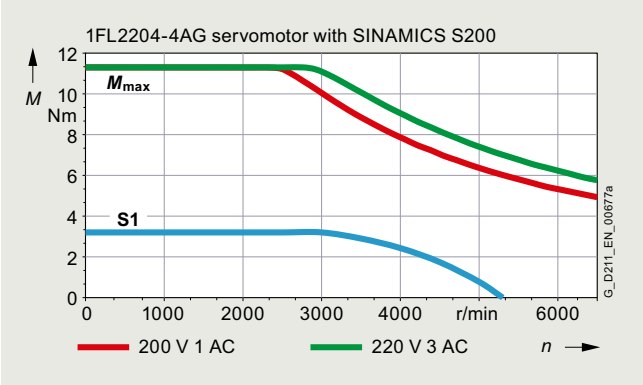

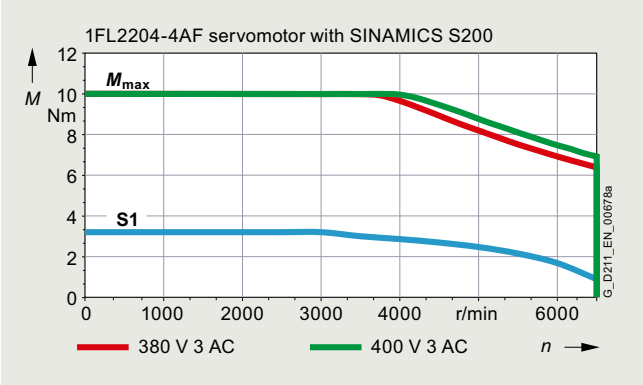

© Siemens 2025

Technical specifications

SIMOTICS S-1FL2 shaft height 40 Compact

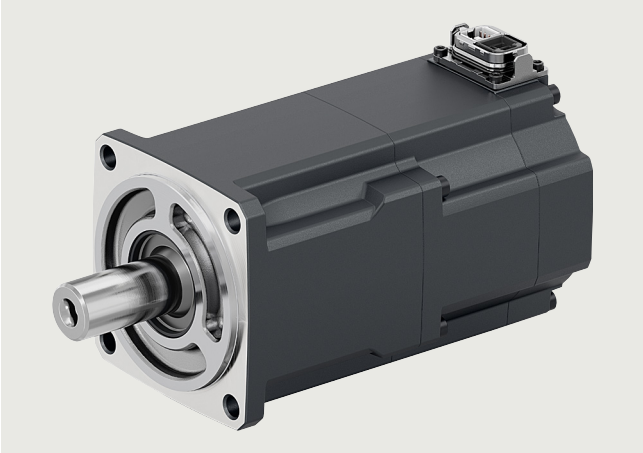

Specific technical specifications

SIMOTICS S-1FL2 servomotors		Low Inertia				Medium Inertia			
Shaft height 40 Compact		**1FL2104-2BG**	**1FL2104-2BF**	**1FL2104-4BG**	**1FL2104-4BF**	**1FL2204-2BG**	**1FL2204-2BF**	**1FL2204-4BG**	**1FL2204-4BF**
Static torque M_0	Nm (lb_f-ft)	2.4 (1.77)	2.4 (1.77)	3.2 (2.36)	3.2 (2.36)	2.4 (1.77)	2.4 (1.77)	3.2 (2.36)	3.2 (2.36)
Stall current I_0	A	4.2	2.4	4.4	3	4.4	2.5	4.4	3
Maximum torque M_{max}	Nm (lb_f-ft)	8.4 (6.20)	8.4 (6.20)	11.2 (8.26)	11.2 (8.26)	8.4 (6.20)	8.4 (6.20)	11.3 (8.33)	11.2 (8.26)
Maximum current I_{max}	A	16	9,3	16	10.9	16	9.3	16	10.9
Maximum speed n_{max}	r/min	6500	6500	6500	6500	6500	6500	6500	6500
Rotor moment of inertia J_{Mot}	kg cm^2 (lb_f-in^2)	0.67 (0.23)	0.67 (0.23)	0.87 (0.30)	0.87 (0.30)	1.27 (0.43)	1.27 (0.43)	1.67 (0.57)	1.67 (0.57)
Moment of inertia (with brake) $J_{Mot\ Br}$	kg cm^2 (lb_f-in^2)	0.77 (0.26)	0.77 (0.26)	0.97 (0.33)	0.97 (0.33)	1.37 (0.47)	1.37 (0.47)	1.77 (0.60)	1.77 (0.60)
Weight m_{Mot}	kg (lb)	2.0 (4.41)	2.0 (4.41)	2.4 (5.29)	2.4 (5.29)	2.0 (4.41)	2.0 (4.41)	2.4 (5.29)	2.4 (5.29)
Weight (with brake) $m_{Mot\ Br}$	kg (lb)	2.8 (6.17)	2.8 (6.17)	3.2 (7.05)	3.2 (7.05)	2.8 (6.17)	2.8 (6.17)	3.2 (7.05)	3.2 (7.05)
200 ... 240 V 1 AC / 3 AC									
Rated speed n_N	r/min	3000	–	3000	–	3000	–	3000	–
Rated torque M_N	Nm (lb_f-ft)	2.4 (1.77)	–	3.2 (2.36)	–	2.4 (1.77)	–	3.2 (2.36)	–
Rated current I_N	A	4.2	–	4.4	–	4.4	–	4.4	–
Rated power P_N	W	750	–	1000	–	750	–	1000	–
380 ... 480 V 3 AC									
Rated speed n_N	r/min	–	3000	–	3000	–	3000	–	3000
Rated torque M_N	Nm (lb_f-ft)	–	2.4 (1.77)	–	3.2 (2.36)	–	2.4 (1.77)	–	3.2 (2.36)
Rated current I_N	A	–	2.4	–	3	–	2.5	–	3
Rated power P_N	W	–	750	–	1000	–	750	–	1000
Suitable for servo converters									
• SINAMICS S200 Basic		6SL5610-	–	6SL5610-	–	6SL5610-	–	6SL5610-	–
- 200 ... 240 V 1 AC – Pulse Train Input (PTI)		1BB10-8AA0	–	1BB11-0AA0	–	1BB10-8AA0	–	1BB11-0AA0	–
- 200 ... 240 V 1 AC – PROFINET (PN)		1BB10-8AF0	–	1BB11-0AF0	–	1BB10-8AF0	–	1BB11-0AF0	–
- 200 ... 240 V 3 AC – Pulse Train Input (PTI)		1BB10-8AA0	–	1BB11-0AA0	–	1BB10-8AA0	–	1BB11-0AA0	–
- 200 ... 240 V 3 AC – PROFINET (PN)		1BB10-8AF0	–	1BB11-0AF0	–	1BB10-8AF0	–	1BB11-0AF0	–
• SINAMICS S200		6SL5510-	6SL5510-	6SL5510-	6SL5510-	6SL5510-	6SL5510-	6SL5510-	6SL5510-
- 200 ... 240 V 1 AC – Pulse Train Input (PTI)		1BB10-8AA0	–	1BB11-0AA0	–	1BB10-8AA0	–	1BB11-0AA0	–
- 200 ... 240 V 1 AC – PROFINET (PN)		1BB10-8AF0	–	1BB11-0AF0	–	1BB10-8AF0	–	1BB11-0AF0	–
- 200 ... 240 V 3 AC – Pulse Train Input (PTI)		1BB10-8AA0	–	1BB11-0AA0	–	1BB10-8AA0	–	1BB11-0AA0	–
- 200 ... 240 V 3 AC – PROFINET (PN)		1BB10-8AF0	–	1BB11-0AF0	–	1BB10-8AF0	–	1BB11-0AF0	–
- 380 ... 480 V 3 AC – Pulse Train Input (PTI)		–	1BE10-8AA0	–	1BE11-0AA0	–	1BE10-8AA0	–	1BE11-0AA0
- 380 ... 480 V 3 AC – PROFINET (PN)		–	1BE10-8AF0	–	1BE11-0AF0	–	1BE10-8AF0	–	1BE11-0AF0

© Siemens 2025

SIMOTICS S-1FL2 shaft height 40 Compact

Technical specifications

Dimensional drawing

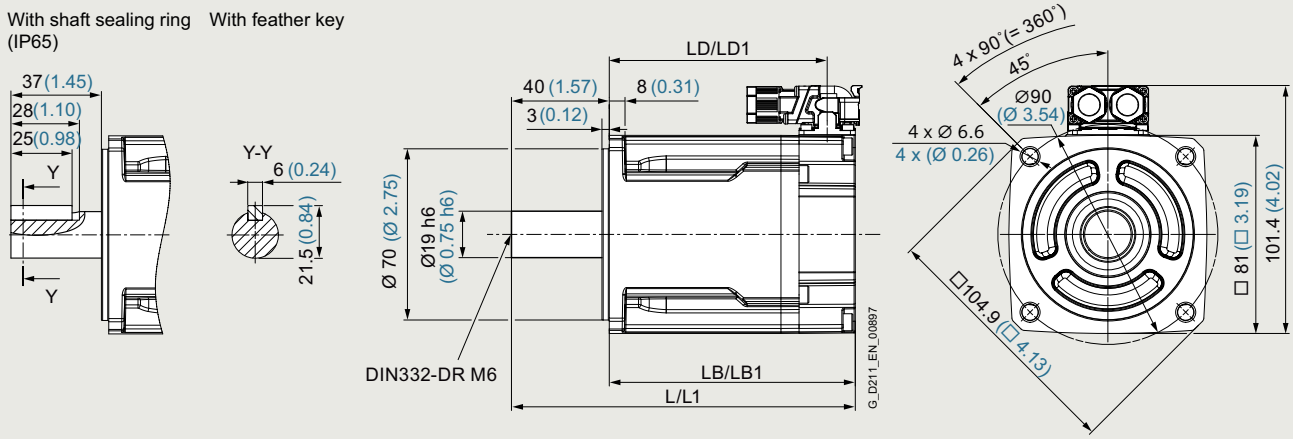

SIMOTICS S-1FL2 Shaft height 40 Compact	Motor length					
	Without brake			With brake		
	L	LB	LD	L1	LB1	LD1
1FL2104-2B	140.6 (5.54)	100.6 (3.96)	89.1 (3.51)	180.6 (7.11)	140.6 (5.54)	129.1 (5.08)
1FL2204-2B						
1FL2104-4B	152.6 (6.01)	112.6 (4.43)	101.1 (3.98)	192.6 (7.58)	152.6 (6.01)	141.1 (5.56)
1FL2204-4B						

Dimensions in mm (values in brackets are in inches)

Speed/torque characteristics

Low Inertia

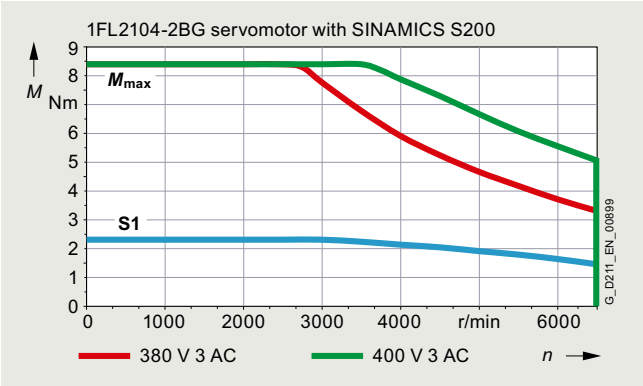

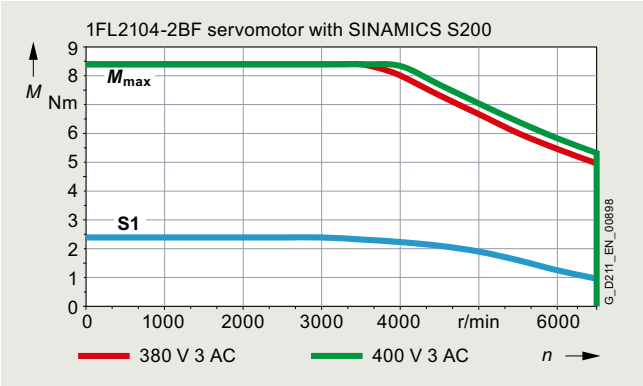

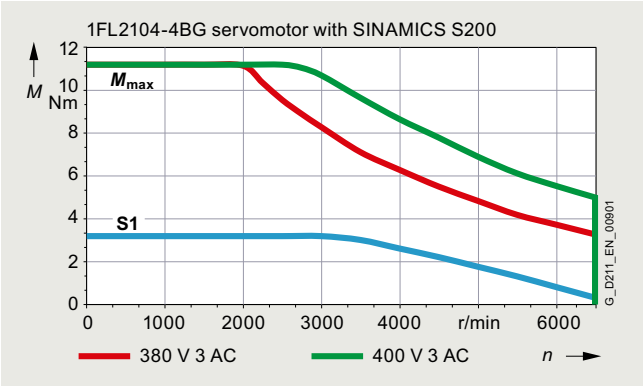

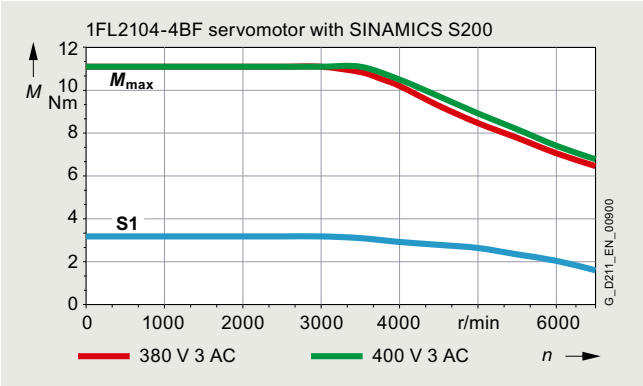

© Siemens 2025

Technical specifications

Medium Inertia

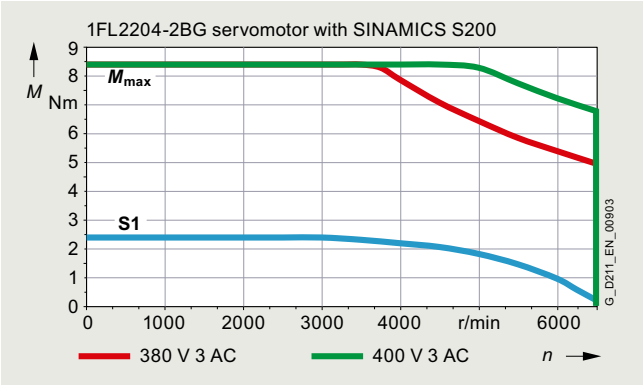

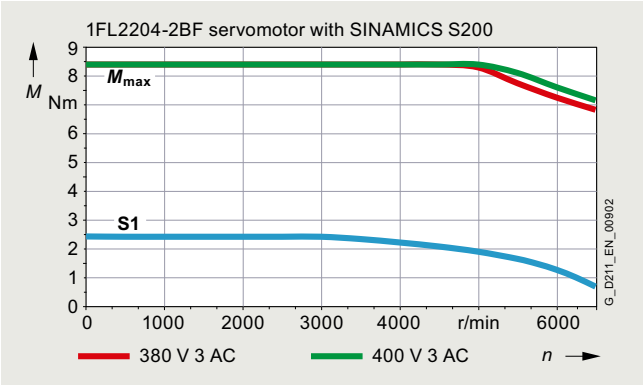

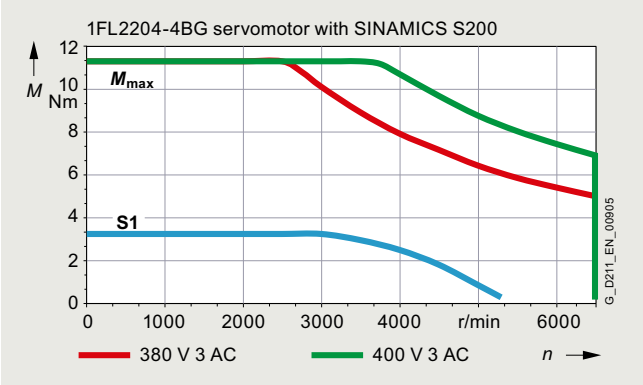

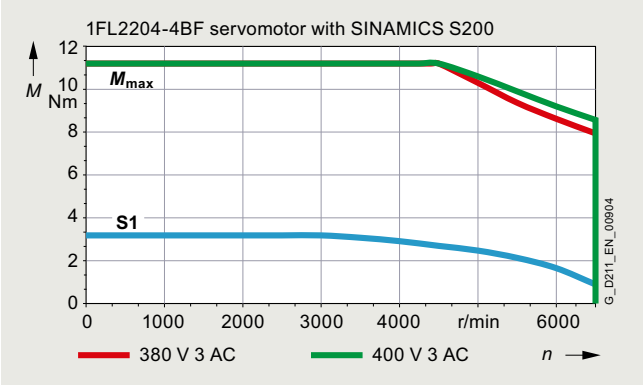

© Siemens 2025

Technical specifications

SIMOTICS S-1FL2 shaft height 45

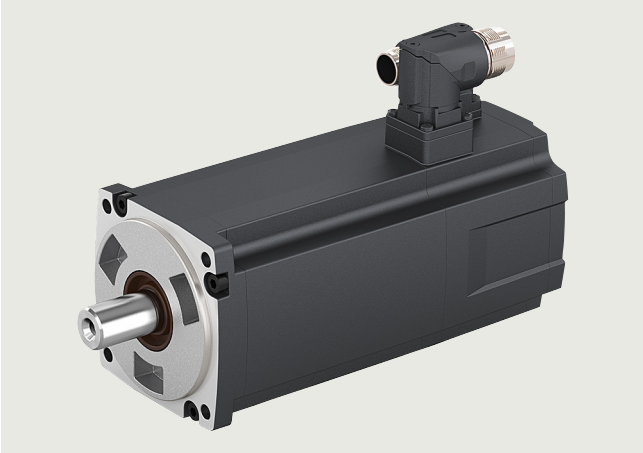

Specific technical specifications

SIMOTICS S-1FL2 servomotors		**High Inertia**	
Shaft height 45		**1FL2304-2AF**	**1FL2304-4AF**
Static torque M_0	Nm (lb_f-ft)	1.45 (1.07)	3.02 (2.23)
Stall current I_0	A	1.3	2.5
Maximum torque M_{max}	Nm (lb_f-ft)	4.445 (3.28)	8.365 (6.17)
Maximum current I_{max}	A	4.2	7.3
Maximum speed n_{max}	r/min	4000	4000
Rotor moment of inertia J_{Mot}	kg cm^2 (lb_f-in^2)	2.69 (0.92)	5.18 (1.77)
Moment of inertia (with brake) $J_{Mot\ Br}$	kg cm^2 (lb_f-in^2)	3.05 (1.04)	5.54 (1.89)
Weight m_{Mot}	kg (lb)	3.5 (7.72)	5.4 (11.9)
Weight (with brake) $m_{Mot\ Br}$	kg (lb)	4.9 (10.8)	6.8 (15.0)
200 ... 240 V 1 AC / 3 AC			
Rated speed n_N	r/min	–	–
Rated torque M_N	Nm (lb_f-ft)	–	–
Rated current I_N	A	–	–
Rated power P_N	W	–	–
380 ... 480 V 3 AC			
Rated speed n_N	r/min	3000	3000
Rated torque M_N	Nm (lb_f-ft)	1.27 (0.94)	2.39 (1.76)
Rated current I_N	A	1.2	2.1
Rated power P_N	W	400	750
Suitable for servo converters			
• SINAMICS S200 Basic		–	–
- 200 ... 240 V 1 AC – Pulse Train Input (PTI)		–	–
- 200 ... 240 V 1 AC – PROFINET (PN)		–	–
- 200 ... 240 V 3 AC – Pulse Train Input (PTI)		–	–
- 200 ... 240 V 3 AC – PROFINET (PN)		–	–
• SINAMICS S200		6SL5510-	6SL5510-
- 200 ... 240 V 1 AC – Pulse Train Input (PTI)		–	–
- 200 ... 240 V 1 AC – PROFINET (PN)		–	–
- 200 ... 240 V 3 AC – Pulse Train Input (PTI)		–	–
- 200 ... 240 V 3 AC – PROFINET (PN)		–	–
- 380 ... 480 V 3 AC – Pulse Train Input (PTI)		1BE10-4AA0	1BE10-8AA0
- 380 ... 480 V 3 AC – PROFINET (PN)		1BE10-4AF0	1BE10-8AF0

© Siemens 2025

Technical specifications

Dimensional drawing

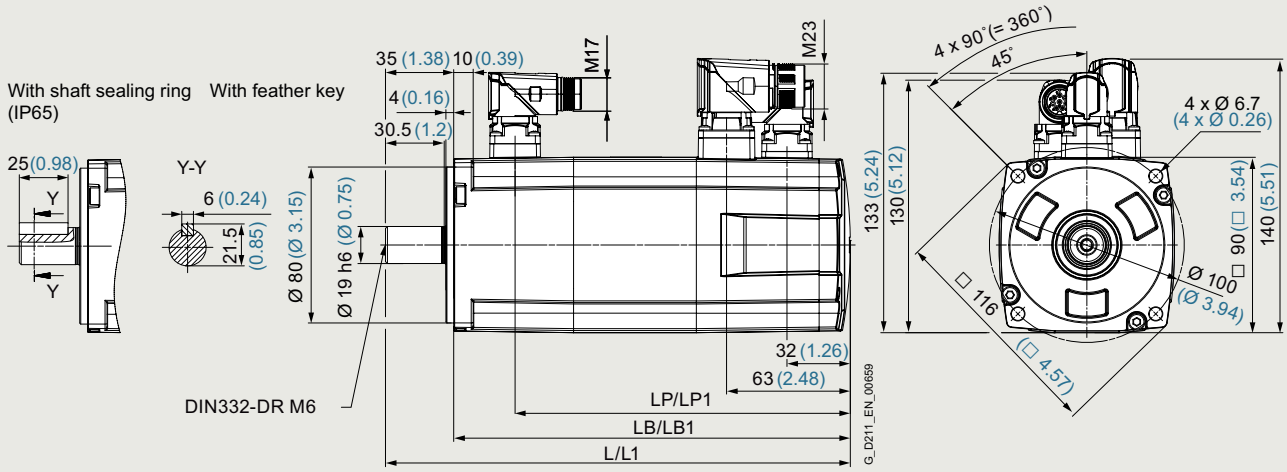

SIMOTICS S-1FL2 Shaft height 45	Motor length					
	Without brake			With brake		
	L	LB	LP	L1	LB1	LP1
1FL2304-2	192 (3.63)	157 (2.64)	-	238.5 (4.8)	203.5 (3.81)	172 (3.36)
1FL2304-4	239 (4.14)	204 (3.16)	-	285.5 (5.31)	250.5 (4.33)	219 (3.87)

Dimensions in mm (values in brackets are in inches)

Speed/torque characteristics

High Inertia

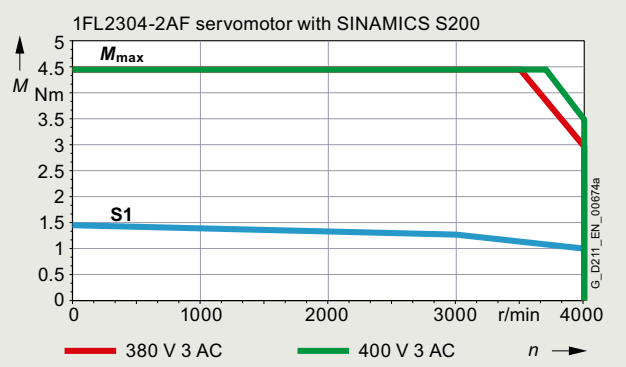

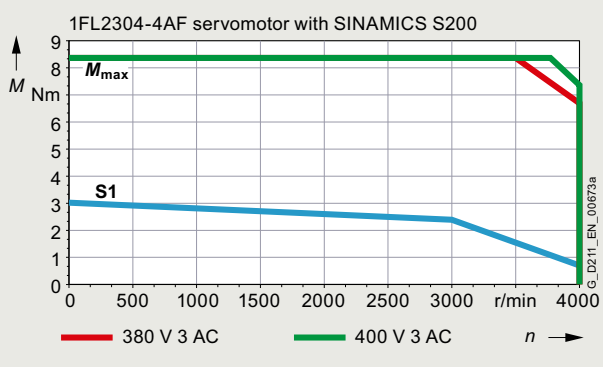

© Siemens 2025

Technical specifications

SIMOTICS S-1FL2 shaft height 48

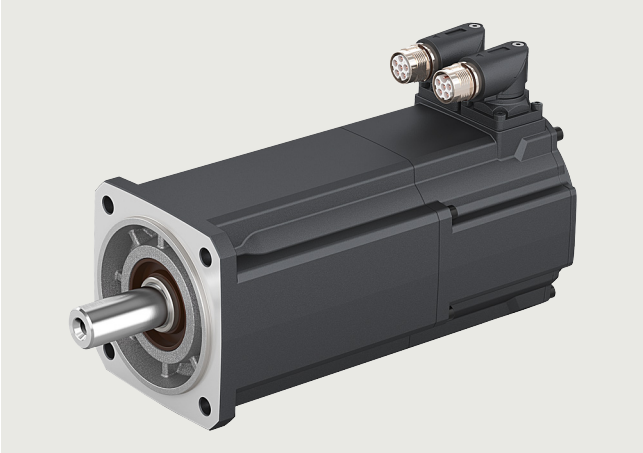

Specific technical specifications

SIMOTICS S-1FL2 servomotors		Medium Inertia	
Shaft height 48		**1FL2205-2AF**	**1FL2205-4AF**
Static torque M_0	Nm (lb_f-ft)	3.6 (2.66)	6 (4.43)
Stall current I_0	A	2.9	4.7
Maximum torque M_{max}	Nm (lb_f-ft)	11.5 (8.48)	19.3 (14.2)
Maximum current I_{max}	A	9.5	15.1
Maximum speed n_{max}	r/min	6000	6000
Rotor moment of inertia J_{Mot}	kg cm^2 (lb_f-in^2)	3.15 (1.08)	5.1 (1.74)
Moment of inertia (with brake) $J_{Mot\ Br}$	kg cm^2 (lb_f-in^2)	4.03 (1.38)	5.98 (2.04)
Weight m_{Mot}	kg (lb)	3.6 (7.94)	5 (11.0)
Weight (with brake) $m_{Mot\ Br}$	kg (lb)	4.7 (10.4)	6.1 (13.5)
200 ... 240 V 1 AC / 3 AC			
Rated speed n_N	r/min	–	–
Rated torque M_N	Nm (lb_f-ft)	–	–
Rated current I_N	A	–	–
Rated power P_N	W	–	–
380 ... 480 V 3 AC			
Rated speed n_N	r/min	3000	3000
Rated torque M_N	Nm (lb_f-ft)	3 (2.21)	4.6 (3.39)
Rated current I_N	A	2.5	3.75
Rated power P_N	W	940	1450
Suitable for servo converters			
• SINAMICS S200 Basic		–	–
- 200 ... 240 V 1 AC – Pulse Train Input (PTI)		–	–
- 200 ... 240 V 1 AC – PROFINET (PN)		–	–
- 200 ... 240 V 3 AC – Pulse Train Input (PTI)		–	–
- 200 ... 240 V 3 AC – PROFINET (PN)		–	–
• SINAMICS S200		6SL5510-	6SL5510-
- 200 ... 240 V 1 AC – Pulse Train Input (PTI)		–	–
- 200 ... 240 V 1 AC – PROFINET (PN)		–	–
- 200 ... 240 V 3 AC – Pulse Train Input (PTI)		–	–
- 200 ... 240 V 3 AC – PROFINET (PN)		–	–
- 380 ... 480 V 3 AC – Pulse Train Input (PTI)		1BE11-0AA0	1BE11-5AA0
- 380 ... 480 V 3 AC – PROFINET (PN)		1BE11-0AF0	1BE11-5AF0

© Siemens 2025

Technical specifications

Dimensional drawing

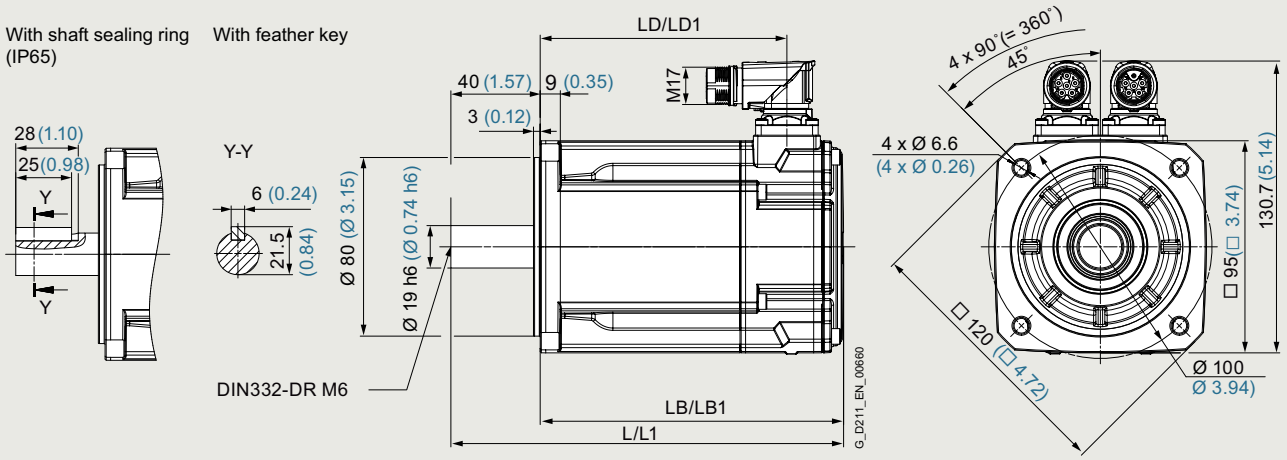

SIMOTICS S-1FL2 Shaft height 48	Motor length					
	Without brake			With brake		
	L	LB	LD	L1	LB1	LD1
1FL2205-2	175.9 (6.92)	135.9 (5.35)	110.5 (4.35)	218.9 (8.62)	178.9 (7.04)	153.5 (6.04)
1FL2205-4	207.9 (8.18)	167.9 (6.61)	142.5 (5.61)	250.9 (9.88)	210.9 (8.3)	185.5 (7.3)

Dimensions in mm (values in brackets are in inches)

Speed/torque characteristics

Medium Inertia

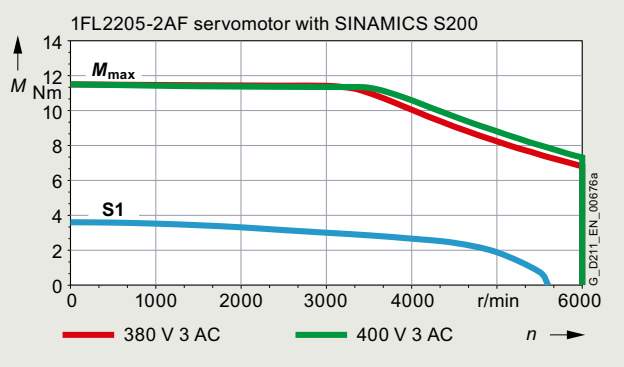

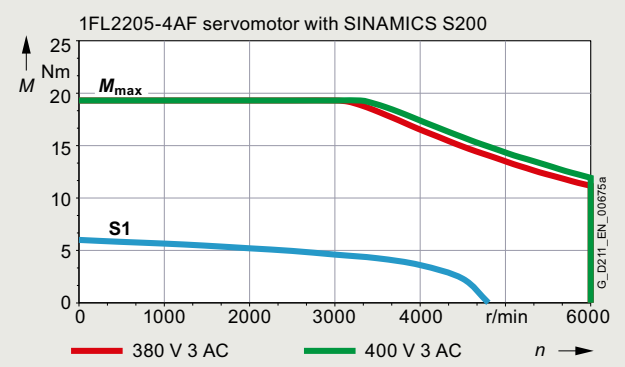

© Siemens 2025

SIMOTICS S-1FL2 shaft height 52

Technical specifications

SIMOTICS S-1FL2 shaft height 52

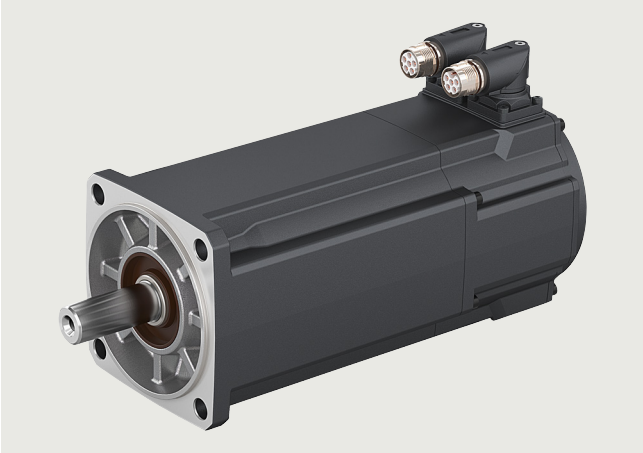

Specific technical specifications

SIMOTICS S-1FL2 servomotors		**Low Inertia**	
Shaft height 52		**1FL2105-2AF**	**1FL2105-4AF**
Static torque M_0	Nm (lb_f-ft)	5 (3.69)	8 (5.90)
Stall current I_0	A	4.65	6.7
Maximum torque M_{max}	Nm (lb_f-ft)	15.9 (11.7)	25.3 (18.7)
Maximum current I_{max}	A	18	24
Maximum speed n_{max}	r/min	6000	6000
Rotor moment of inertia J_{Mot}	kg cm^2 (lb_f-in^2)	1.71 (0.58)	2.65 (0.91)
Moment of inertia (with brake) $J_{Mot\ Br}$	kg cm^2 (lb_f-in^2)	2.54 (0.87)	3.48 (1.19)
Weight m_{Mot}	kg (lb)	5.5 (12.1)	7.8 (17.2)
Weight (with brake) $m_{Mot\ Br}$	kg (lb)	6.4 (14.1)	8.7 (19.2)
200 ... 240 V 3 AC			
Rated speed n_N	r/min	–	–
Rated torque M_N	Nm (lb_f-ft)	–	–
Rated current I_N	A	–	–
Rated power P_N	W	–	–
380 ... 480 V 3 AC			
Rated speed n_N	r/min	3000	3000
Rated torque M_N	Nm (lb_f-ft)	4.6 (3.39)	6.6 (4.87)
Rated current I_N	A	4.35	5.6
Rated power P_N	W	1450	2100
Suitable for servo converters			
• SINAMICS S200 Basic		–	–
- 200 ... 240 V 1 AC – Pulse Train Input (PTI)		–	–
- 200 ... 240 V 1 AC – PROFINET (PN)		–	–
- 200 ... 240 V 3 AC – Pulse Train Input (PTI)		–	–
- 200 ... 240 V 3 AC – PROFINET (PN)		–	–
• SINAMICS S200		6SL5510-	6SL5510-
- 200 ... 240 V 1 AC – Pulse Train Input (PTI)		–	–
- 200 ... 240 V 1 AC – PROFINET (PN)		–	–
- 200 ... 240 V 3 AC – Pulse Train Input (PTI)		–	–
- 200 ... 240 V 3 AC – PROFINET (PN)		–	–
- 380 ... 480 V 3 AC – Pulse Train Input (PTI)		1BE11-5AA0	1BE12-5AA0
- 380 ... 480 V 3 AC – PROFINET (PN)		1BE11-5AF0	1BE12-5AF0

© Siemens 2025

Technical specifications

Dimensional drawing

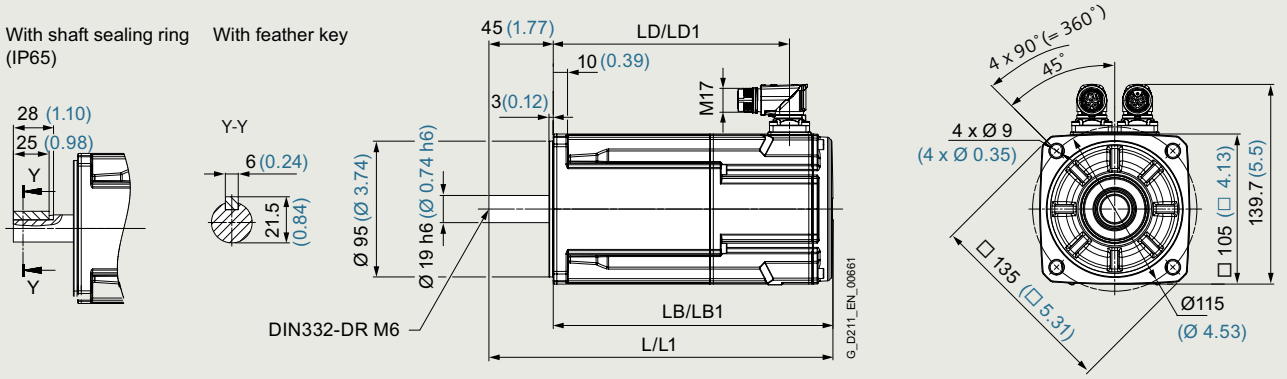

SIMOTICS S-1FL2 Shaft height 52	Motor length					
	Without brake			With brake		
	L	LB	LD	L1	LB1	LD1
1FL2105-2	213.9 (6.92)	168.9 (5.35)	138.5 (4.35)	240.7 (8.62)	195.7 (7.04)	165.3 (6.04)
1FL2105-4	255.9 (8.18)	210.9 (6.61)	180.5 (5.61)	282.7 (9.88)	237.7 (8.3)	207.3 (7.3)

Dimensions in mm (values in brackets are in inches)

Speed/torque characteristics

Low Inertia

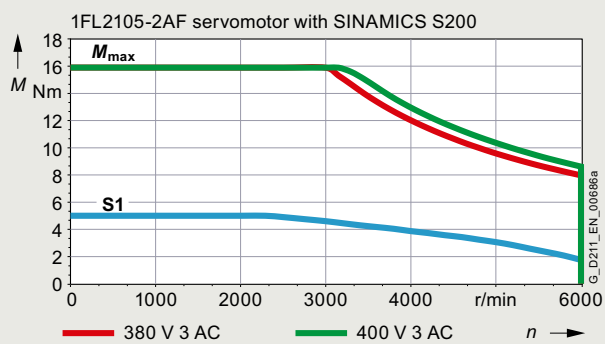

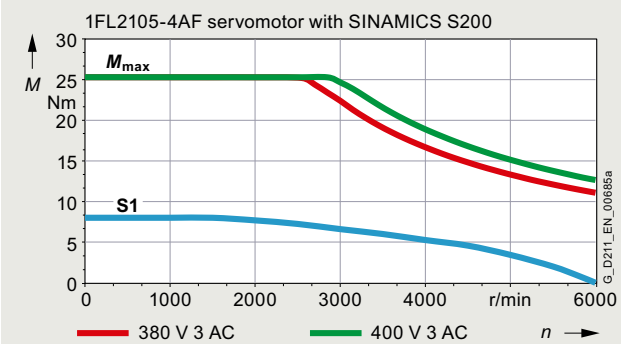

© Siemens 2025

Technical specifications

SIMOTICS S-1FL2 shaft height 65

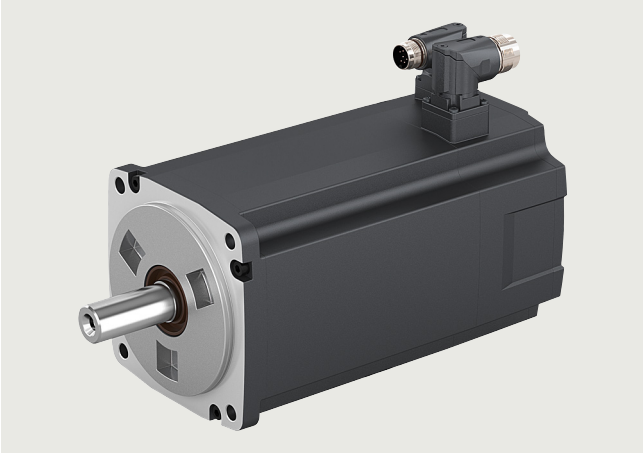

Specific technical specifications

SIMOTICS S-1FL2 servomotors		High Inertia				
Shaft height 65		**1FL2306-1AC**	**1FL2306-2AC**	**1FL2306-4AC**	**1FL2306-6AC**	**1FL2306-7AC**
Static torque M_0	Nm (lb_f-ft)	3.7 (2.73)	5 (3.69)	8 (5.90)	8.8 (6.49)	13.3 (9.81)
Stall current I_0	A	2.5	3	4.9	5.3	7.8
Maximum torque M_{max}	Nm (lb_f-ft)	12 (8.85)	17 (12.5)	22 (16.2)	30 (22.1)	33.425 (24.7)
Maximum current I_{max}	A	8.4	10.7	14.1	19	20.7
Maximum speed n_{max}	r/min	3000	3000	3000	3000	3000
Rotor moment of inertia J_{Mot}	kg cm^2 (lb_f-in^2)	7.96 (2.72)	11.65 (3.98)	15.29 (5.22)	22.61 (7.73)	29.94 (10.2)
Moment of inertia (with brake) $J_{Mot\ Br}$	kg cm^2 (lb_f-in^2)	9.57 (3.27)	13.26 (4.53)	16.9 (5.77)	24.22 (8.28)	31.55 (10.8)
Weight m_{Mot}	kg (lb)	5.9 (13.0)	7.3 (16.1)	8.6 (19.0)	11.1 (24.5)	13.7 (30.2)
Weight (with brake) $m_{Mot\ Br}$	kg (lb)	8.9 (19.6)	10.3 (22.7)	11.6 (25.6)	14.1 (31.1)	16.7 (36.8)
200 ... 240 V 3 AC						
Rated speed n_N	r/min	–	–	–	–	–
Rated torque M_N	Nm (lb_f-ft)	–	–	–	–	–
Rated current I_N	A	–	–	–	–	–
Rated power P_N	W	–	–	–	–	–
380 ... 480 V 3 AC						
Rated speed n_N	r/min	2000	2000	2000	2000	2000
Rated torque M_N	Nm (lb_f-ft)	3.58 (2.64)	4.78 (3.53)	7.16 (5.28)	8.4 (6.20)	9.6 (7.08)
Rated current I_N	A	2.5	3	4.6	5.3	5.9
Rated power P_N	W	750	1000	1500	1750	2000
Suitable for servo converters						
• SINAMICS S200 Basic		–	–	–	–	–
- 200 ... 240 V 1 AC – Pulse Train Input (PTI)		–	–	–	–	–
- 200 ... 240 V 1 AC – PROFINET (PN)		–	–	–	–	–
- 200 ... 240 V 3 AC – Pulse Train Input (PTI)		–	–	–	–	–
- 200 ... 240 V 3 AC – PROFINET (PN)		–	–	–	–	–
• SINAMICS S200		6SL5510-	6SL5510-	6SL5510-	6SL5510-	6SL5510-
- 200 ... 240 V 1 AC – Pulse Train Input (PTI)		–	–	–	–	–
- 200 ... 240 V 1 AC – PROFINET (PN)		–	–	–	–	–
- 200 ... 240 V 3 AC – Pulse Train Input (PTI)		–	–	–	–	–
- 200 ... 240 V 3 AC – PROFINET (PN)		–	–	–	–	–
- 380 ... 480 V 3 AC – Pulse Train Input (PTI)		1BE10-8AA0	1BE11-0AA0	1BE11-5AA0	1BE11-5AA0	1BE12-5AA0
- 380 ... 480 V 3 AC – PROFINET (PN)		1BE10-8AF0	1BE11-0AF0	1BE11-5AF0	1BE11-5AF0	1BE12-5AF0

© Siemens 2025

Technical specifications

Dimensional drawing

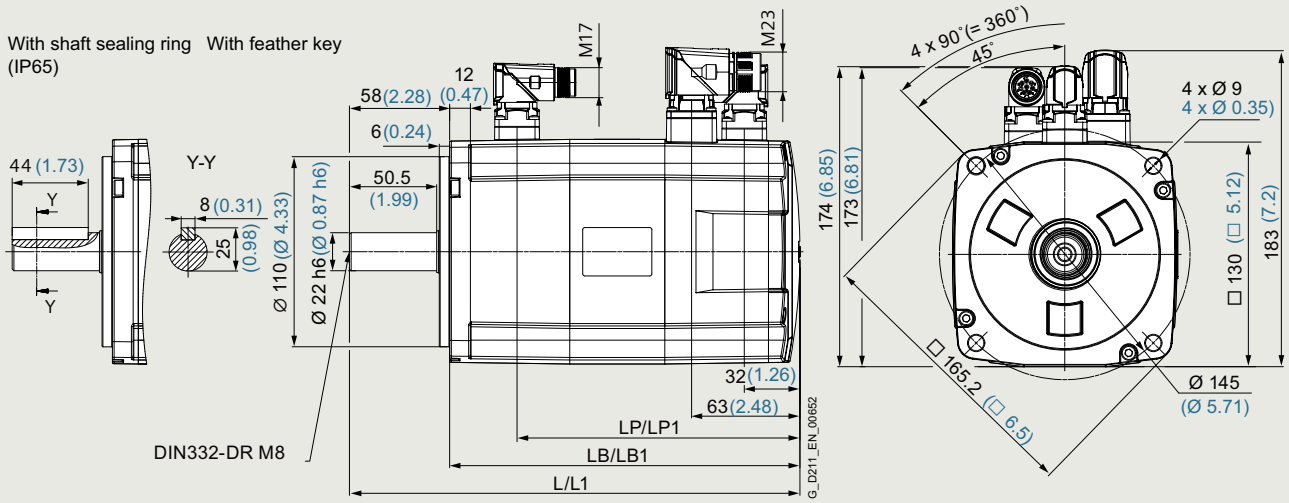

SIMOTICS S-1FL2 Shaft height 65	Motor length					
	Without brake			With brake		
	L	LB	LP	L1	LB1	LP1
1FL2306-1	206.2 (8.12)	148.2 (5.83)	-	260.7 (10.26)	202.7 (7.98)	163.7 (6.44)
1FL2306-2	222.7 (8.77)	164.7 (6.48)	-	277.2 (10.91)	219.2 (8.63)	180.2 (7.09)
1FL2306-4	239.2 (9.42)	181.2 (7.13)	-	293.7 (11.56)	235.7 (9.28)	196.7 (7.74)
1FL2306-6	272.2 (10.72)	214.2 (8.43)	-	326.7 (12.86)	268.7 (10.58)	229.7 (9.04)
1FL2306-7	305.2 (12.01)	247.2 (9.73)	-	359.7 (14.16)	301.7 (11.88)	262.7 (10.34)

Dimensions in mm (values in brackets are in inches)

Speed/torque characteristics

High Inertia

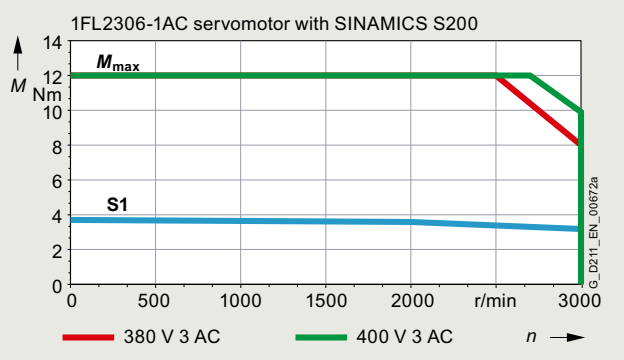

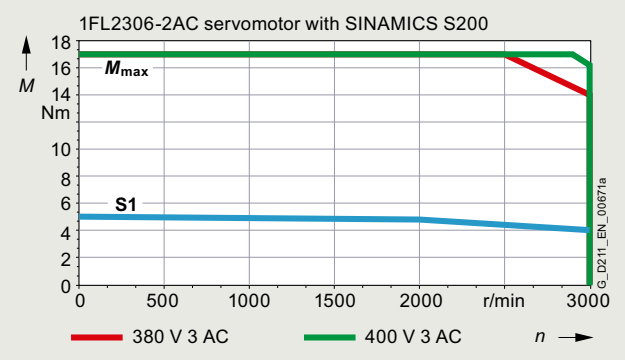

© Siemens 2025

Technical specifications

High Inertia (continued)

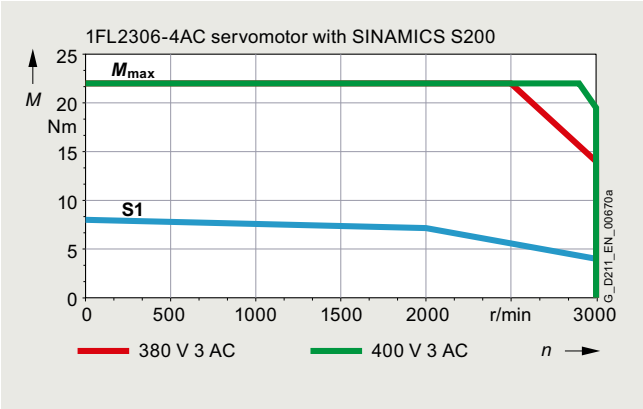

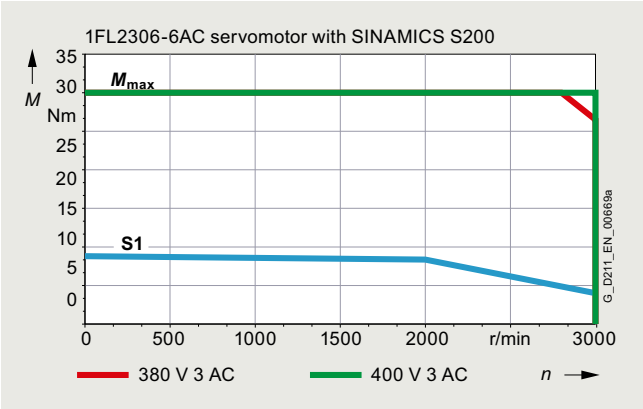

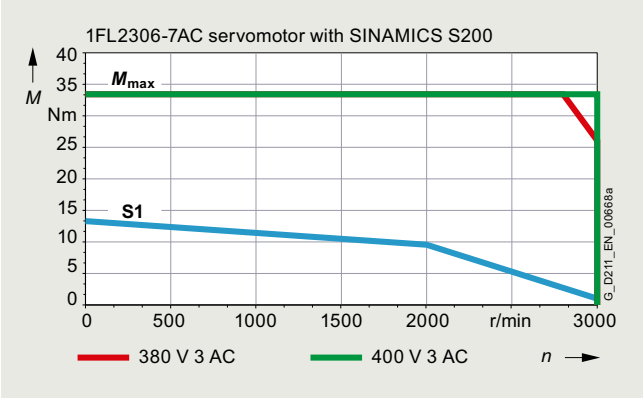

© Siemens 2025

Technical specifications

SIMOTICS S-1FL2 shaft height 90

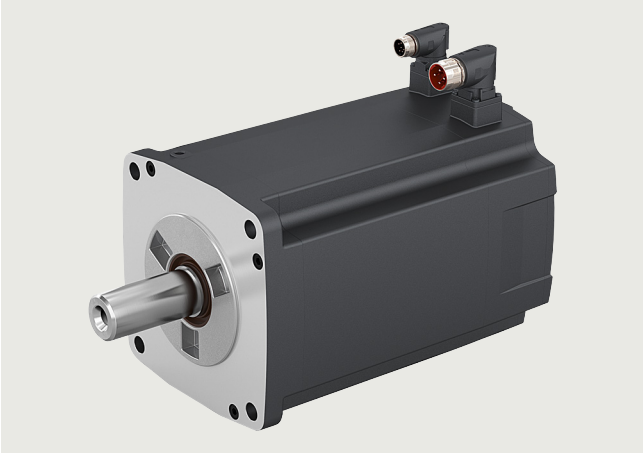

Specific technical specifications

SIMOTICS S-1FL2 servomotors		High Inertia			
Shaft height 90		**1FL2310-0AC**	**1FL2310-2AC**	**1FL2310-4AC**	**1FL2310-6AC**
Static torque M_0	Nm (lb_f-ft)	12.6 (9.29)	18.1 (13.4)	25.2 (18.6)	35.2 (26.0)
Stall current I_0	A	7.8	11	12.6	13.2
Maximum torque M_{max}	Nm (lb_f-ft)	37.5 (27.7)	55 (40.6)	70 (51.6)	90 (66.4)
Maximum current I_{max}	A	25.2	36.2	36.9	35.6
Maximum speed n_{max}	r/min	3000	3000	2500	2000
Rotor moment of inertia J_{Mot}	kg cm^2 (lb_f-in^2)	47.41 (16.2)	69.1 (23.6)	90.83 (30.9)	134.29 (45.9)
Moment of inertia (with brake) $J_{Mot\ Br}$	kg cm^2 (lb_f-in^2)	56.78 (19.4)	78.47 (26.8)	100.2 (34.2)	143.66 (49.1)
Weight m_{Mot}	kg (lb)	15.4 (34.0)	19.4 (42.8)	23.7 (52.3)	31.9 (70.3)
Weight (with brake) $m_{Mot\ Br}$	kg (lb)	21.4 (47.2)	25.4 (56.0)	29.7 (65.5)	37.9 (83.6)
200 ... 240 V 3 AC					
Rated speed n_N	r/min	–	–	–	–
Rated torque M_N	Nm (lb_f-ft)	–	–	–	–
Rated current I_N	A	–	–	–	–
Rated power P_N	W	–	–	–	–
380 ... 480 V 3 AC					
Rated speed n_N	r/min	2000	2000	2000	2000
Rated torque M_N	Nm (lb_f-ft)	11.9 (8.78)	16.7 (12.3)	23.9 (17.6)	33.4 (24.6)
Rated current I_N	A	7.8	11	12.6	13.2
Rated power P_N	W	2500	3500	5000	7000
Suitable for servo converters					
• SINAMICS S200 Basic		–	–	–	–
- 200 ... 240 V 1 AC – Pulse Train Input (PTI)		–	–	–	–
- 200 ... 240 V 1 AC – PROFINET (PN)		–	–	–	–
- 200 ... 240 V 3 AC – Pulse Train Input (PTI)		–	–	–	–
- 200 ... 240 V 3 AC – PROFINET (PN)		–	–	–	–
• SINAMICS S200		6SL5510-	6SL5510-	6SL5510-	6SL5510-
- 200 ... 240 V 1 AC – Pulse Train Input (PTI)		–	–	–	–
- 200 ... 240 V 1 AC – PROFINET (PN)		–	–	–	–
- 200 ... 240 V 3 AC – Pulse Train Input (PTI)		–	–	–	–
- 200 ... 240 V 3 AC – PROFINET (PN)		–	–	–	–
- 380 ... 480 V 3 AC – Pulse Train Input (PTI)		1BE12-5AA0	1BE13-5AA0	1BE15-0AA0	1BE17-0AA0
- 380 ... 480 V 3 AC – PROFINET (PN)		1BE12-5AF0	1BE13-5AF0	1BE15-0AF0	1BE17-0AF0

© Siemens 2025

SIMOTICS S-1FL2 shaft height 90

Technical specifications

Dimensional drawing

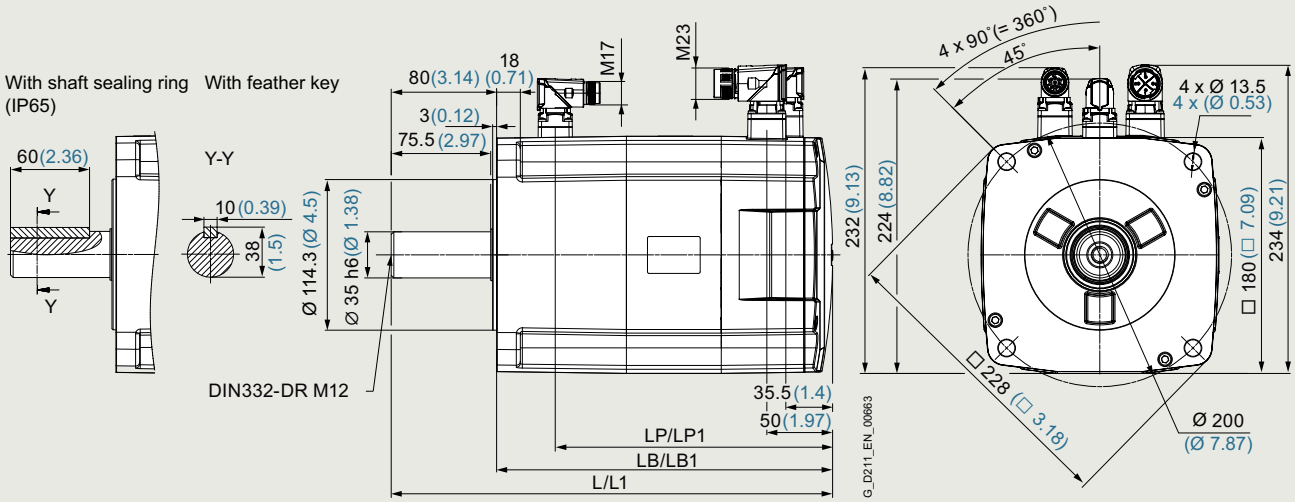

SIMOTICS S-1FL2 Shaft height 90	Motor length					
	Without brake			With brake		
	L	LB	LP	L1	LB1	LP1
1FL2310-0	269.5 (10.61)	189.5 (7.46)	-	335 (13.19)	255 (10.04)	210.5 (8.29)
1FL2310-2	295.5 (11.63)	215.5 (8.48)	-	361 (14.21)	281 (11.06)	236.5 (9.31)
1FL2310-4	321.5 (12.66)	241.5 (9.51)	-	387 (15.24)	307 (12.09)	262.5 (10.33)
1FL2310-6	373.5 (14.7)	293.5 (11.55)	-	439 (17.28)	359 (14.13)	314.5 (12.38)

Dimensions in mm (values in brackets are in inches)

Speed/torque characteristics

High Inertia

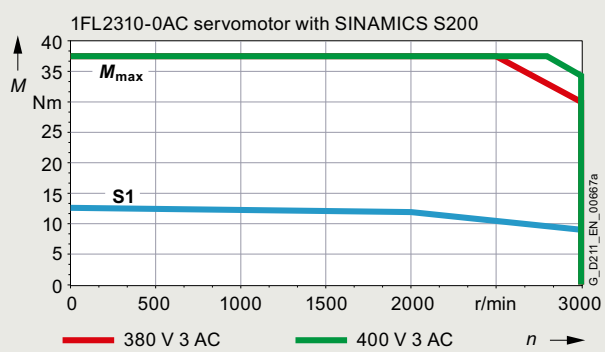

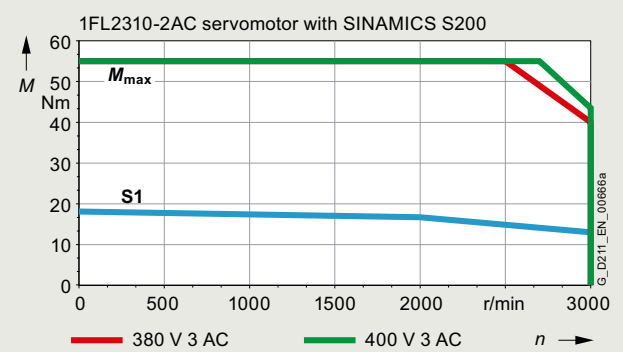

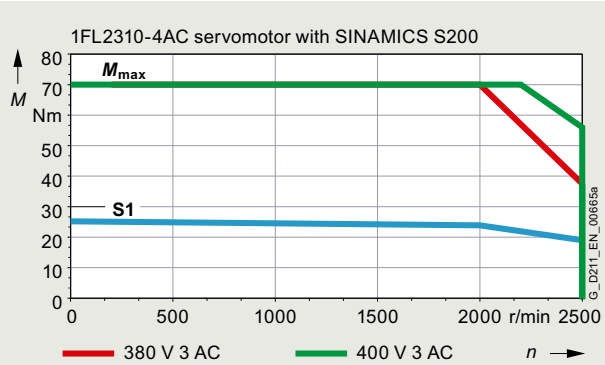

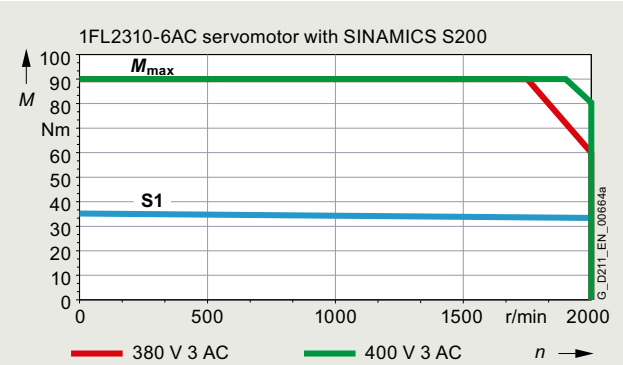

© Siemens 2025

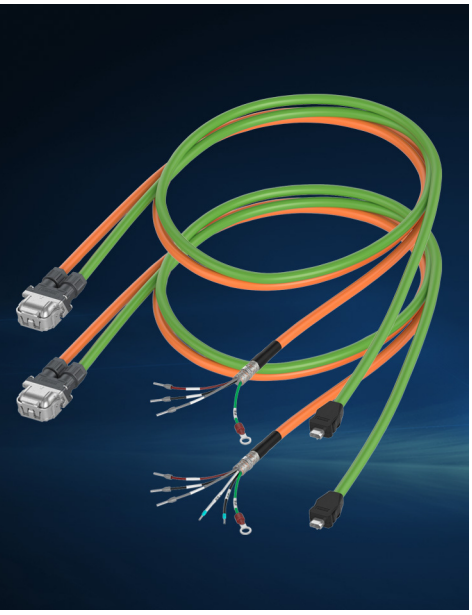

4/2 **MOTION-CONNECT 350 and 380**
4/2 Overview

4/3 **Pre-assembled dual cables for power and communication for SINAMICS S200**
4/3 Overview
4/3 Technical specifications

4/4 **Pre-assembled power cables for SINAMICS S200**
4/4 Overview
4/4 Technical specifications

4/5 **Pre-assembled signal cables for SINAMICS S200**
4/5 Overview
4/5 Technical specifications

4/6 **Pre-assembled brake cables for SINAMICS S200**
4/6 Overview
4/6 Technical specifications

4/7 **Connectors for SINAMICS S200**
4/7 Overview

For **selection and ordering data** please refer to section "System overview" "SINAMICS S200 servo drive system" from page 1/16.

Detailed technical information on SINAMICS S200 is available on the internet at:
www.siemens.com/sinamics-s200/documentation

In addition, the Siemens Product Configurator can be used on the internet at the following address:
www.siemens.com/sinamics-s200/configuration

© Siemens 2025

Overview

MOTION-CONNECT 350 and 380 connection systems

The cables are available in lengths of up to 30 m and one step further optimized in easy and secure installation with "one-push-lock" motor connecting solution for motor shaft heights 20, 30, 40 and 40 Compact.

- MOTION-CONNECT 350 cables, which provide a connection solution for fixed installation applications
- MOTION-CONNECT 380 cables, which provide a connection solution for drag chain installation applications that require a high number of bending cycles

The use of pre-assembled MOTION-CONNECT 350/380 cables ensures high quality and system-tested, problem-free operation.

Degree of protection of pre-assembled power and signal cables is IP65 when closed and connected unless otherwise stated.

MOTION-CONNECT 350/380 cables are not suitable for outdoor use.

MOTION-CONNECT 350/380 cables are approved for a maximum horizontal travel distance of 5 m without support.

The cables must be unwound without twisting.

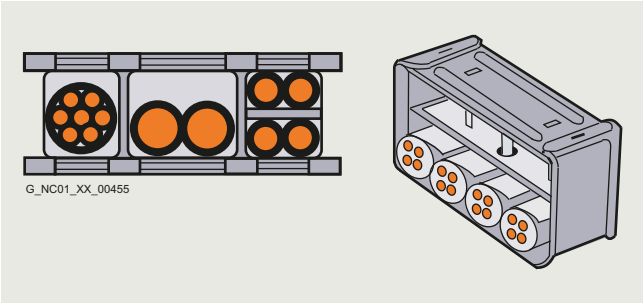

To maximize the service life of the cable carrier and cables, cables in the carrier made from different materials must be separated in the cable carrier using spacers. The spacers must be filled evenly to ensure that the position of the cables does not change during operation. The cables should be distributed as symmetrically as possible according to their weights and dimensions. Cables with different outer diameters should be separated by spacers as well.

When inserting pre-assembled cables into the cable carrier, do not pull at the connector, as this may damage the strain relief or cable clamping.

The cables must not be fixed in the cable carrier.
They must be freely movable.

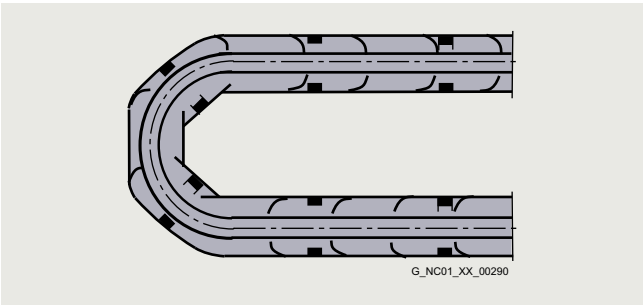

The cables must be able to be moved without applying force, specifically in the bending radii of the carrier.
The specified minimum bending radii must be adhered to.

The cable fixings must be attached at both ends at an appropriate distance from the end points of the moving parts in a dead zone.

Cables must be installed in accordance with the instructions supplied by the cable carrier manufacturer.

In case of vibration load and with horizontal or vertical cable entries, we recommend that the cable is additionally fixed if between the cable strain relief on the cable carrier and the terminal at the motor part of the cable is hanging loose or is not routed. To prevent machine vibrations being transmitted to the connectors, the cable should be fixed at the moving part where the motor is mounted.

Derating factors for power and signal cables

Ambient air temperature °C (°F)	Derating factor according to EN 60204-1 Table D.1
30 (86)	1.10
35 (95)	1.05
40 (104)	1.00
45 (113)	0.96
50 (122)	0.90
55 (131)	0.84
60 (140)	0.78

Characteristic curves

Characteristic curve for MOTION-CONNECT 380

The blue area beneath the characteristic curve represents the potential range of use for the cables. The characteristic curves represent the tested operating points.

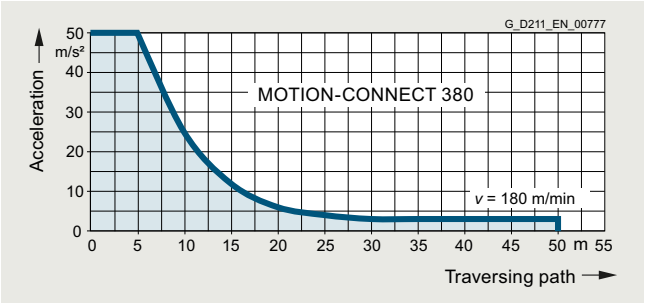

Permissible acceleration for MOTION?CONNECT 380 signal and power cables

© Siemens 2025

Overview

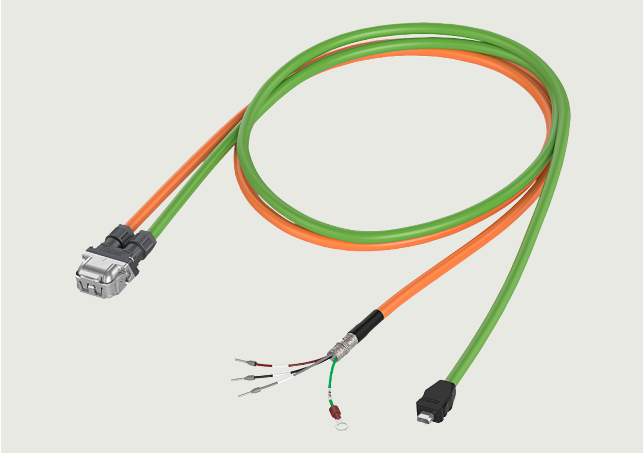

Example: MOTION-CONNECT 350/380, dual cable without brake cores for SIMOTICS S-1FL2 Low Inertia/Medium Inertia servomotors

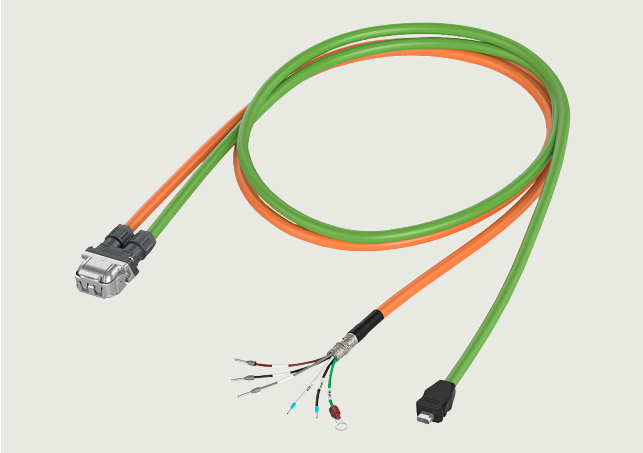

Example: MOTION-CONNECT 350/380, dual cable with brake cores for SIMOTICS S-1FL2 Low Inertia/Medium Inertia servomotors

For selection and ordering data please refer to section "System overview" "SINAMICS S200 servo drive system" from page 1/16.

Technical specifications

Dual cable	**without brake cores**		**with brake cores**	
Product name	**MOTION-CONNECT 350**	**MOTION-CONNECT 380**	**MOTION-CONNECT 350**	**MOTION-CONNECT 380**
• for coverter	• SINAMICS S200 200 … 240 V 1 AC / 3 AC and • SINAMICS S200 380 … 480 V 3 AC			
• for motor	• SIMOTICS S-1FL2 Low Inertia, 0.05 kW … 1 kW and • SIMOTICS S-1FL2 Medium Inertia, 0.2 kW … 1 kW			
Type	6FX3502-7CD01-.... 6FX3502-7CN01-....	6FX3802-7CD01-.... 6FX3802-7CN01-....	6FX3502-7DD01-.... 6FX3502-7DN01-....	6FX3802-7DD01-.... 6FX3802-7DN01-....
No. of cores	10	10	12	12
Degree of protection motor side (when mated and locked)	IP65	IP65	IP65	IP65
Certificate of suitability				
• RoHS	Yes	Yes	Yes	Yes
• CE and UKCA	Yes	Yes	Yes	Yes
• cURus	Yes	Yes	Yes	Yes
Rated voltage U_0/U	300 V/1000 V	300 V/1000 V	300 V/1000 V	300 V/1000 V
Test voltage, rms	4 kV	4 kV	4 kV	4 kV
Operating temperature on the surface				
• Fixed installation	-20 … +80 °C (-4 … +176 °F)	-20 … +80 °C (-4 … +176 °F)	-20 … +80 °C (-4 … +176 °F)	-20 … +80 °C (-4 … +176 °F)
• Flexible installation	-20 … +80 °C (-4 … +176 °F)	-20 … +80 °C (-4 … +176 °F)	-20 … +80 °C (-4 … +176 °F)	-20 … +80 °C (-4 … +176 °F)
Tensile stress, max.				
• Fixed installation	50 N/mm²	50 N/mm²	50 N/mm²	50 N/mm²
• Flexible installation	20 N/mm²	20 N/mm²	20 N/mm²	20 N/mm²
Smallest bending radius				
• Fixed installation	4 × diameter	4 × diameter	4 × diameter	4 × diameter
• Flexible installation	7.5 × diameter	7.5 × diameter	7.5 × diameter	7.5 × diameter
Torsional stress	Absolute 30°/m	Absolute 30°/m	Absolute 30°/m	Absolute 30°/m
Bending	1 million	5 million	1 million	5 million
Insulation material	PP	PP	PP	PP
Oil resistance	EN 60811-2-1	EN 60811-2-1	EN 60811-2-1	EN 60811-2-1
Outer jacket	PVC	PUR	PVC	PUR
Outer diameter				
• Power cable	7.5 mm ±0.2 mm	7.5 mm ±0.2 mm	7.5 mm ±0.2 mm	7.5 mm ±0.2 mm
• Signal cable	7.0 mm ±0.2 mm	7.0 mm ±0.2 mm	7.0 mm ±0.2 mm	7.0 mm ±0.2 mm
Flame-retardant	EN 60332-1-1 to 1-3	EN 60332-1-1 to 1-3	EN 60332-1-1 to 1-3	EN 60332-1-1 to 1-3

© Siemens 2025

Pre-assembled power cables for SINAMICS S200

Overview

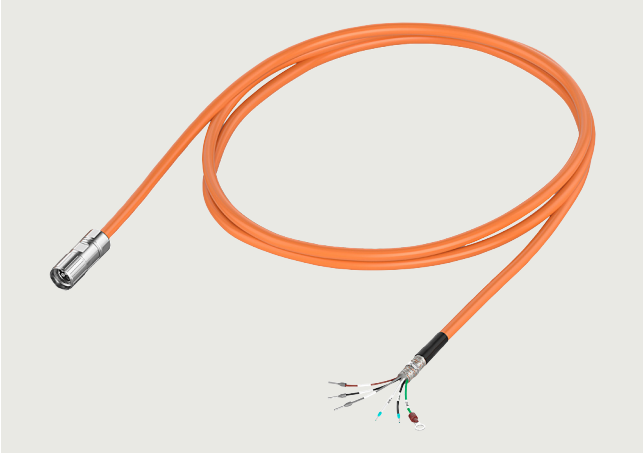

Example: MOTION-CONNECT 350/380, power cable with brake cores for SIMOTICS S-1FL2 Low Inertia/Medium Inertia servomotors

Example: MOTION-CONNECT 350/380, power cable without brake cores for SIMOTICS S-1FL2 High Inertia servomotors

For selection and ordering data please refer to section "System overview" "SINAMICS S200 servo drive system" from page 1/16.

Technical specifications

Power cable	**without brake cores**				**with brake cores**	
Product name	**MOTION-CONNECT 350**	**MOTION-CONNECT 380**	**MOTION-CONNECT 350**	**MOTION-CONNECT 380**	**MOTION-CONNECT 350**	**MOTION-CONNECT 380**
• for coverter	• SINAMICS S200 380 ... 480 V 3 AC					
• for motor	• SIMOTICS S-1FL2 Low Inertia, 1.5 kW... 2 kW and • SIMOTICS S-1FL2 Medium Inertia, 1 kW ... 1.5 kW		• SIMOTICS S-1FL2 High Inertia, 0.4 kW ... 7 kW		• SIMOTICS S-1FL2 Low Inertia, 1.5 kW ... 2 kW and • SIMOTICS S-1FL2 Medium Inertia, 1 kW ... 1.5 kW	
Type	6FX3502-5CK32-....	6FX3802-5CK32-....	6FX3502-5CL01-.... 6FX3502-5CL02-.... 6FX3502-5CL12-....	6FX3802-5CL01-.... 6FX3802-5CL02-.... 6FX3802-5CL12-....	6FX3502-5DK32-....	6FX3802-5DK32-....
No. of cores	4	4	4	4	6	6
Degree of protection motor side (when mated and locked)	IP65	IP65	IP65	IP65	IP65	IP65
Certificate of suitability						
• RoHS	Yes	Yes	Yes	Yes	Yes	Yes
• CE and UKCA	Yes	Yes	Yes	Yes	Yes	Yes
• cURus	Yes	Yes	Yes	Yes	Yes	Yes
Rated voltage U_0/U	600 V/1000 V	600 V/1000 V	600 V/1000 V	600 V/1000 V	600 V/1000 V	600 V/1000 V
Test voltage, rms	4 kV	4 kV	4 kV	4 kV	4 kV	4 kV
Operating temperature on the surface						
• Fixed installation	-20 … +80 °C (-4 … +176 °F)	-20 … +80 °C (-4 … +176 °F)	-20 … +80 °C (-4 … +176 °F)	-20 … +80 °C (-4 … +176 °F)	-20 … +80 °C (-4 … +176 °F)	-20 … +80 °C (-4 … +176 °F)
• Flexible installation	-20 … +80 °C (-4 … +176 °F)	-20 … +80 °C (-4 … +176 °F)	-20 … +80 °C (-4 … +176 °F)	-20 … +80 °C (-4 … +176 °F)	-20 … +80 °C (-4 … +176 °F)	-20 … +80 °C (-4 … +176 °F)
Tensile stress, max.						
• Fixed installation	50 N/mm²	50 N/mm²	50 N/mm²	50 N/mm²	50 N/mm²	50 N/mm²
• Flexible installation	20 N/mm²	20 N/mm²	20 N/mm²	20 N/mm²	20 N/mm²	20 N/mm²
Smallest bending radius						
• Fixed installation	4 × diameter	4 × diameter	4 × diameter	4 × diameter	4 × diameter	4 × diameter
• Flexible installation	7.5 × diameter	7.5 × diameter	7.5 × diameter	7.5 × diameter	7.5 × diameter	7.5 × diameter
Torsional stress	Absolute 30°/m	Absolute 30°/m	Absolute 30°/m	Absolute 30°/m	Absolute 30°/m	Absolute 30°/m
Bending	1 million	5 million	1 million	5 million	1 million	5 million
Insulation material	PP	PP	PP	PP	PP	PP
Oil resistance	EN 60811-2-1	EN 60811-2-1	EN 60811-2-1	EN 60811-2-1	EN 60811-2-1	EN 60811-2-1
Outer jacket	PVC	PUR	PVC	PUR	PVC	PUR
Outer diameter	7.5 mm ±0.2 mm	7.5 mm ±0.2 mm	6FX3.02-5CL01-.... : 7.5 mm ±0.2 mm 6FX3.02-5CL02-.... : 7.8 mm ±0.3 mm 6FX3.02-5CL12-.... : 9.0 mm ±0.3 mm		7.5 mm ±0.2 mm	7.5 mm ±0.2 mm
Flame-retardant	EN 60332-1-1 to 1-3	EN 60332-1-1 to 1-3	EN 60332-1-1 to 1-3	EN 60332-1-1 to 1-3	EN 60332-1-1 to 1-3	EN 60332-1-1 to 1-3

© Siemens 2025

Overview

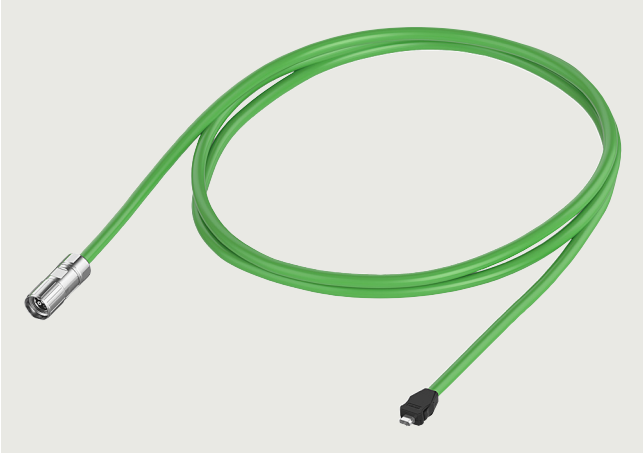

Example: MOTION-CONNECT 350/380, signal cable for encoder connection for SIMOTICS S-1FL2 Medium Inertia servomotors

Example: MOTION-CONNECT 350/380, signal cable for encoder connection for SIMOTICS S-1FL2 High Inertia servomotors

For selection and ordering data please refer to section "System overview" "SINAMICS S200 servo drive system" from page 1/16.

Technical specifications

Signal cable	**for encoder connection**			
Product name	**MOTION-CONNECT 350**	**MOTION-CONNECT 380**	**MOTION-CONNECT 350**	**MOTION-CONNECT 380**
• for coverter	• SINAMICS S200 380 ... 480 V 3 AC			
• for motor	• SIMOTICS S-1FL2 Low Inertia, 1.5 kW ... 2 kW and • SIMOTICS S-1FL2 Medium Inertia, 1 kW ... 1.5 kW		• SIMOTICS S-1FL2 High Inertia, 0.4 kW ... 7 kW	
Type	6FX3502-2XB11-....	6FX3802-2XB11-....	6FX3502-2XB12-....	6FX3802-2XB12-....
No. of cores	6	6	6	6
Degree of protection motor side (when mated and locked)	IP65	IP65	IP65	IP65
Certificate of suitability				
• RoHS	Yes	Yes	Yes	Yes
• CE and UKCA	Yes	Yes	Yes	Yes
• cURus	Yes	Yes	Yes	Yes
Rated voltage U_0/U	30 V/300 V	30 V/300 V	30 V/300 V	30 V/300 V
Test voltage, rms	500 V	500 V	500 V	500 V
Operating temperature on the surface				
• Fixed installation	-20 … +80 °C (-4 … +176 °F)	-20 … +80 °C (-4 … +176 °F)	-20 … +80 °C (-4 … +176 °F)	-20 … +80 °C (-4 … +176 °F)
• Flexible installation	-20 … +80 °C (-4 … +176 °F)	-20 … +80 °C (-4 … +176 °F)	-20 … +80 °C (-4 … +176 °F)	-20 … +80 °C (-4 … +176 °F)
Tensile stress, max.				
• Fixed installation	50 N/mm²	50 N/mm²	50 N/mm²	50 N/mm²
• Flexible installation	20 N/mm²	20 N/mm²	20 N/mm²	20 N/mm²
Smallest bending radius				
• Fixed installation	4 × diameter	4 × diameter	4 × diameter	4 × diameter
• Flexible installation	7.5 × diameter	7.5 × diameter	7.5 × diameter	7.5 × diameter
Torsional stress	Absolute 30°/m	Absolute 30°/m	Absolute 30°/m	Absolute 30°/m
Bending	1 million	5 million	1 million	5 million
Insulation material	PP	PP	PP	PP
Oil resistance	EN 60811-2-1	EN 60811-2-1	EN 60811-2-1	EN 60811-2-1
Outer jacket	PVC	PUR	PVC	PUR
Outer diameter	7.0 mm ±0.2 mm	7.0 mm ±0.2 mm	7.0 mm ±0.2 mm	7.0 mm ±0.2 mm
Flame-retardant	EN 60332-1-1 to 1-3	EN 60332-1-1 to 1-3	EN 60332-1-1 to 1-3	EN 60332-1-1 to 1-3

© Siemens 2025

Pre-assembled brake cables for SINAMICS S200

Overview

Example: MOTION-CONNECT 350/380, brake cable for brake connection for SIMOTICS S-1FL2 High Inertia servomotors

For selection and ordering data please refer to section "System overview" "SINAMICS S200 servo drive system" from page 1/16.

Technical specifications

Brake cable	**for brake connection**	
Product name	**MOTION-CONNECT 350**	**MOTION-CONNECT 380**
• for coverter	• SINAMICS S200 380 … 480 V 3 AC	
• for motor	• SIMOTICS S-1FL2 High Inertia, 0.4 kW … 7 kW	
Type	6FX3502-5BL03-....	6FX3802-5BL03-....
No. of cores	2	2
Degree of protection motor side (when mated and locked)	IP65	IP65
Certificate of suitability		
• RoHS	Yes	Yes
• CE and UKCA	Yes	Yes
• cURus	Yes	Yes
Rated voltage U_0/U	30 V/300 V	30 V/300 V
Test voltage, rms	2000 V	2000 V
Operating temperature on the surface		
• Fixed installation	-20 … +80 °C (-4 … +176 °F)	-20 … +80 °C (-4 … +176 °F)
• Flexible installation	-20 … +80 °C (-4 … +176 °F)	-20 … +80 °C (-4 … +176 °F)
Tensile stress, max.		
• Fixed installation	50 N/mm²	50 N/mm²
• Flexible installation	20 N/mm²	20 N/mm²
Smallest bending radius		
• Fixed installation	4 × diameter	4 × diameter
• Flexible installation	7.5× diameter	7.5× diameter
Torsional stress	Absolute 30°/m	Absolute 30°/m
Bending	1 million	5 million
Insulation material	PP	PP
Oil resistance	EN 60811-2-1	EN 60811-2-1
Outer jacket	PVC	PUR
Outer diameter	6.0 mm ±0.2 mm	6.0 mm ±0.2 mm
Flame-retardant	EN 60332-1-1 to 1-3	EN 60332-1-1 to 1-3

© Siemens 2025

Overview

Shaft height	Connectors drive end direction (DE) for hybrid connection	Connectors non drive end direction (NDE) for hybrid connection	Connectors motor side for power connection	for encoder connection	for brake
MOTION-CONNECT connectors for SIMOTICS S-1FL2 Low Inertia servomotors					
20, 30, 40, 40 Compact	6FX2003-3HD00	6FX2003-3HN00	–	–	–
	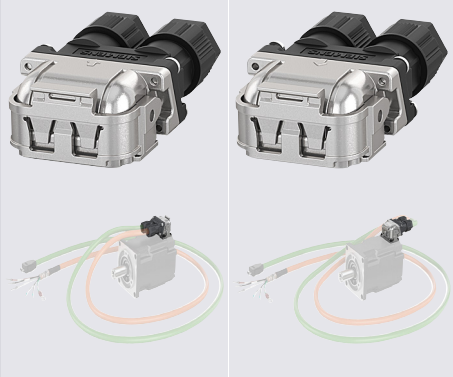				
52	–	–	6FX2003-0LL63	6FX2003-0DB63	– (in power connector)
MOTION-CONNECT connectors for SIMOTICS S-1FL2 Medium Inertia servomotors					
30, 40, 40 Compact	6FX2003-3HD00	6FX2003-3HN00	–	–	–
	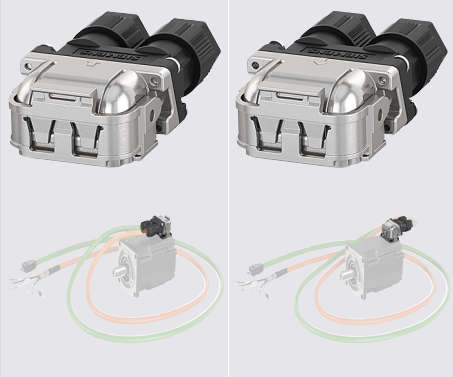				
48	–	–	6FX2003-0LL63	6FX2003-0DB63	– (in power connector)
MOTION-CONNECT connectors for SIMOTICS S-1FL2 High Inertia servomotors					
45, 65, 90	–	–	6FX2003-0LL13	6FX2003-0DB13	6FX2003-0LL53

For selection and ordering data please refer to section "System overview" "SINAMICS S200 servo drive system" from page 1/16.

© Siemens 2025

Connectors for SINAMICS S200

Overview

	Crimp contacts "power and PE" (2000 pieces per reel) for hybrid connection	Crimp contacts "signal and brake" (2000 pieces per reel) for hybrid connection	Connectors converter side for power connection	IX signal connector, C-coded for encoder connection	for brake
MOTION-CONNECT connectors for SINAMICS S200 servo converter					
	6FX2003-7HP00	6FX2003-7HS00	–	6FX2003-0DE61	–
	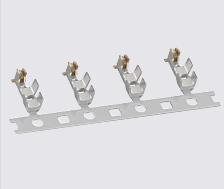	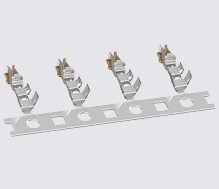			

For selection and ordering data please refer to section "System overview" "SINAMICS S200 servo drive system" from page 1/16.

© Siemens 2025

Engineering tools

5

5/2	**DriveSim Designer**
5/4	**Siemens Product Configurator**
5/5	**TIA Selection Tool**
5/6	**SINAMICS Selector app**
5/7	**SINAMICS web server for SINAMICS S200**
5/11	**SINAMICS Startdrive commissioning tool**

Cybersecurity information

Siemens provides products and solutions with industrial cybersecurity functions that support the secure operation of plants, systems, machines and networks.
In order to protect plants, systems, machines and networks against cyber threats, it is necessary to implement – and continuously maintain – a holistic, state-of-the-art industrial cybersecurity concept. Siemens' products and solutions constitute one element of such a concept.
Customers are responsible for preventing unauthorized access to their plants, systems, machines and networks. Such systems, machines and components should only be connected to an enterprise network or the internet if and to the extent such a connection is necessary and only when appropriate security measures (e.g. firewalls and/or network segmentation) are in place.
For additional information on industrial cybersecurity measures that may be implemented, please visit
www.siemens.com/cybersecurity-industry
Siemens' products and solutions undergo continuous development to make them more secure. Siemens strongly recommends that product updates are applied as soon as they are available and that the latest product versions are used. Use of product versions that are no longer supported, and failure to apply the latest updates may increase customer's exposure to cyber threats.
To stay informed about product updates, subscribe to the Siemens Industrial Cybersecurity RSS Feed under
www.siemens.com/cert

© Siemens 2025

DriveSim Designer

Overview

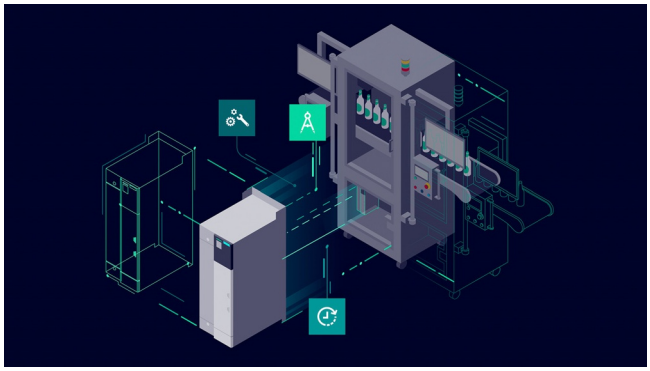

DriveSim Designer provides easy-to-use models for PROFIdrive-enabled SINAMICS converters, so you can create a digital twin of your drive.

The models are validated and tested against real SINAMICS converters and are available in the form of a standardized FMU (Functional Mockup Unit). Therefore, they are compatible with various standard time-based simulation programs such as SIMIT, Simcenter Amesim, ANSYS Twin Builder, MATLAB Simulink or Hopsan.

DriveSim Designer is another element in your engineering toolbox. Together with other virtual Siemens solutions, e.g. SIMATIC S7-PLCSIM Advanced or NX Mechatronics Concept Designer, a consistent model-based development process can be implemented.

Benefits

- Speed up time-to-market for OEMs
- Test validated SINAMICS models under real conditions already at the design or planning stage and make needed adjustments
- Identify issues and improvement capabilities early in the design stage and reduce testing effort to save time and cost
- Download the free-of-charge test version for 1 month to try the suitability of our solution before buying it
- DriveSim Designer offers a wide range of additional functionalities to improve the SINAMICS simulation model, e. g. safety or position telegrams
- Valid for the most used Siemens drives

Advantages of DriveSim Designer compared to SIMIT PROFIdrive blocks:

- Increased level of detail due to speed controller, current setpoint filters and internal load model
- Identical parameter values and meaning as in the real SINAMICS device
- Direct reference to SINAMICS documentation
- Basic Safety functions
- Brake control functions for lifting applications
- Validated against the real SINAMICS drive
- No wiring effort to represent functional configurations
- Significant reduction of SIMIT simulation tags (even more is possible if unused in-/ outputs are deselected within the Component Type Editor (CTE)
- Enables simulation of an (internal) two-mass oscillator as application with realistic SINAMICS parameter settings, besides the known limitations by the minimum sample time in SIMIT
- Compatible with every FMU Co-Simulation 2.0 compatible simulation too

Application

With DriveSim Designer, you can implement three major use cases:

- Providing load characteristics for drive selection and dimensioning
- Virtual commission your PLC already in the design phase
- Test and improve interaction between PLC, drives and application virtually

Use case 1: Dimension and size the correct drive and motor for your application

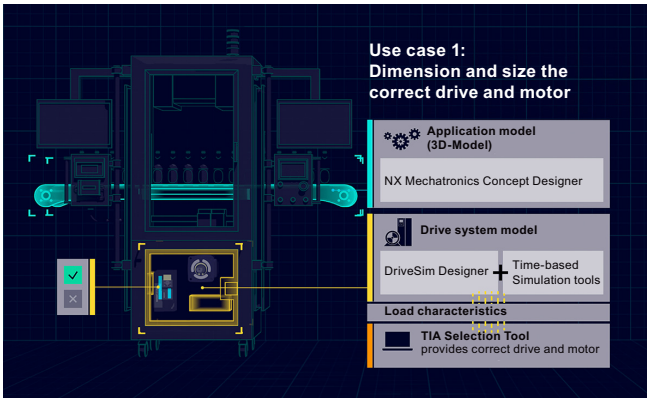

If you are designing a machine, you want to make sure that you select the SINAMICS converter and SIMOTICS motor most suitable for your drive application. As DriveSim Designer is control-unit-agnostic and thus represents a generic drive, you can parametrize it according to the functionality of your application. Running the simulation results in load characteristics, i.e. torque or speed curves over time. You can import these load profiles into TIA Selection Tool to select the suitable Control Unit and dimension the drive to best fit to the demand. So as a result, you have well selected SINAMICS converters and SIMOTICS motors with the help of the digital twin.

Use case 2: Virtual commission your drive and PLC early in the design phase

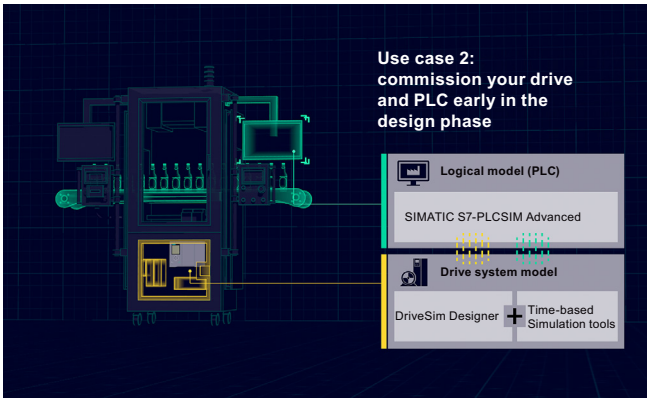

If you are designing a machine, you want to make sure the PLC code works with your SINAMICS drive. After writing the PLC code in TIA Portal, you can connect it via SIMATIC S7-PLCSIM Advanced to any time-based simulation tool (e.g. SIMIT). Integrated into the simulation tool, DriveSim Designer acts as a realistic communication partner for the PLC. Next, you can commission the virtual PLC in TIA Portal as you would do with a real PLC connected to a real drive. Without simulation, you would need to do that on-site. With simulation, you not only save time, but also have the freedom to try out various configurations and optimize your PLC code early in the process.

© Siemens 2025

Application

Use case 3: Combine the application model and automation model with realistic drive system behavior

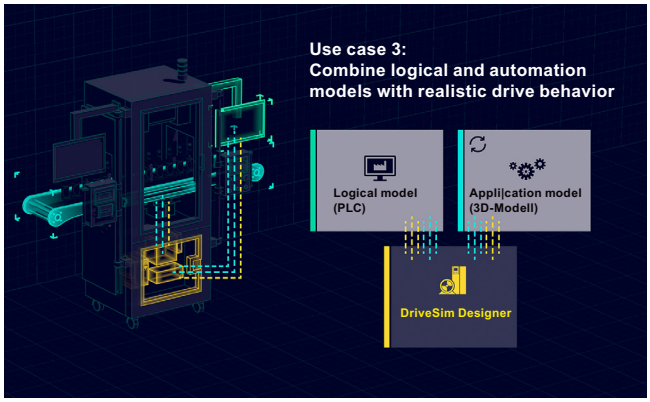

With the third Use case, you can connect a simulation tool such as NX Mechatronic Concept Designer to visualize the mechanical movements of your application. This way, you ensure that the drive behaves according to the desired machine performance. You can test several fault scenarios and optimize the interaction between PLC, application and drive virtually so overall, you can avoid unplanned machine behavior and increase the performance of your setup.

Integration

DriveSim Designer can be run in tools that support FMU 2.0 Co-Simulation Import (https://fmi-standard.org/tools/).

The FMU has been tested in the following simulation environments and is available in the attached application examples.

Tool	Manufacturer	DriveSim*** variant	SIMATIC S7-PLCSIM Advanced interface	Notes
SIMIT	Siemens	***.fmu	Yes	• Permissible configuration: ExternalLoad = 1 & . Speed-Controller = 0 or ExternalLoad = 0 & . Speed-Controller = 1 • Simulation with external load can provide wrong results because the minimum possible time step is 1 ms
Simcenter Amesim	Siemens	***_double.fmu	Yes	
MATLAB Simulink	MathWorks	< 2019a ***_unstruct.fmu ≥ 2019a ***.fmu	Yes	
ANSYS Twin Builder	ANSYS	***.fmu	No	
Hopsan	Linköping University	***_double.fmu	No	• Open Source • Install "win64-with_compiler-installer.exe" package

Selection and ordering data

Description	Article No.
DriveSim Designer	**9SV1110-3AA00-0AA0**

More information

More information is provided on the internet at:
www.siemens.com/drive-virtualization
https://support.industry.siemens.com/cs/document/109812859

You can find more videos on the topic at:

- Simulation of drive systems - Quick, Easy and Validated
- Simulation of drive systems - An introduction to SINAMICS
- Getting started with DriveSim Designer
- How to import DriveSim Designer into SIMIT, Matlab Simulink, Amesim and ANSYS TwinBuilder
- How to connect DriveSim Designer via SIMATIC S7-PLCSIM Advanced to TIA Portal
- How to use DriveSim Designer for drive sizing with TIA Selection Tool
- How to visualize drive system behavior in NX Mechatronics Concept Designer

© Siemens 2025

Overview

The Siemens Product Configurator helps you to configure the optimum drive technology products for a number of applications. The product portfolio comprises the full drive technology range of gearbox, motor, converter and connection system as well as corresponding controller with suitable software license. The intuitive user interface in conjunction with product-specific preliminary selectors makes it simple, fast and efficient to configure products. The result is a bill of materials with extensive documentation consisting of technical data sheets, motor characteristic curves, 2D dimensional drawings / 3D CAD models, EPLAN macros and much more. You can order the products directly by transferring the bill of materials to the shopping cart of SiePortal.

Siemens Product Configurator at a glance

- Quick and easy configuration of drive products and associated components – gearboxes, motors, converters, controllers, connection systems
- Extensive documentation for all products and components, such as
  - Data sheets in up to 12 languages
  - Motor characteristic curves
  - 2D dimensional drawings / 3D CAD models in different formats
  - Terminal box drawing and terminal connection diagram
  - Certificates
  - EPLAN macros
- Ability to order products directly through SiePortal

Access to the Siemens Product Configurator

The Siemens Product Configurator can be accessed without the need for registration or logging in:
www.siemens.com/spc

© Siemens 2025

Overview

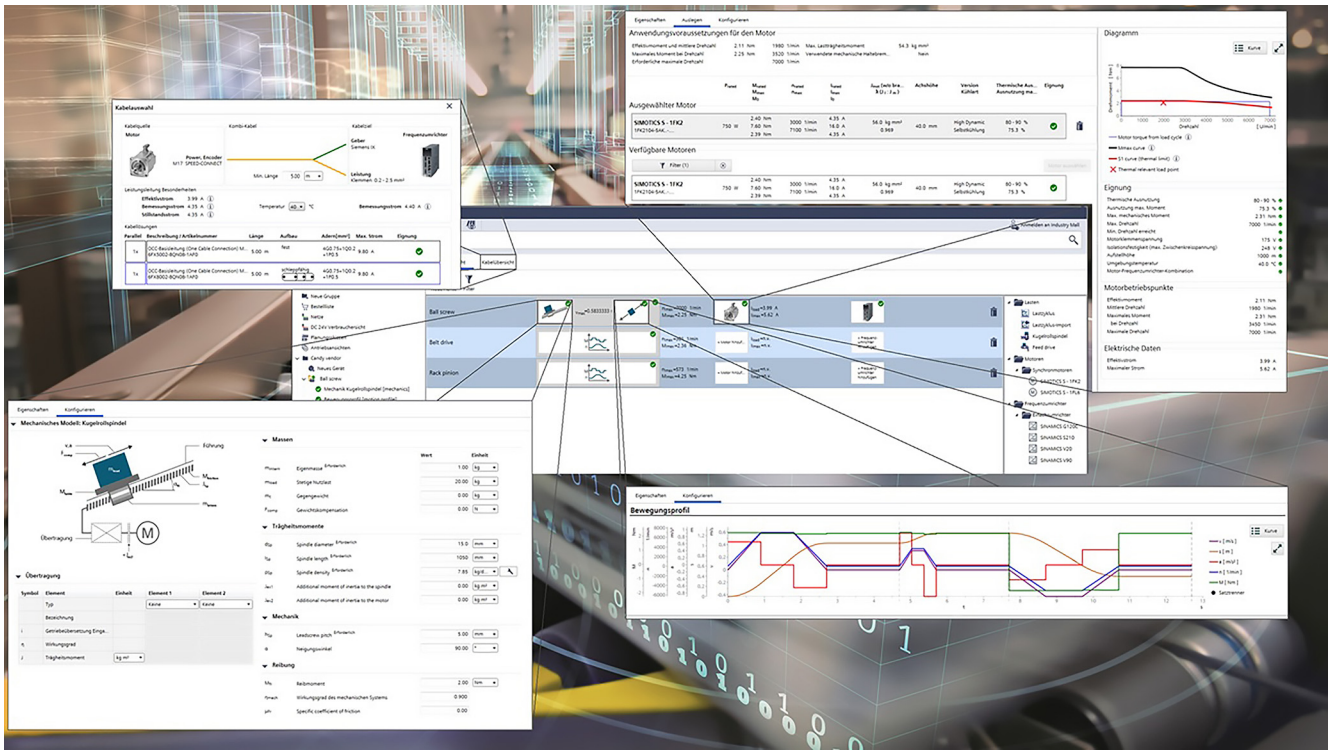

Selection guide and configurator for automation technology

Error-free configuration without expert knowledge through intelligent configurators and selection wizards. Desktop and cloud versions enable cross-team collaboration with maximum flexibility.

There are two versions of TIA Selection Tool:

- Desktop version: for downloading and executing on Microsoft Windows PCs (from Microsoft Windows 10)
- Cloud version: for running in the cloud and launching directly out of the browser (we recommend Google Chrome, Mozilla Firefox and Microsoft Edge)

Projects stored in the cloud can be edited with both tools. This makes it possible to work on-the-go using a tablet, at home on a PC – and vice versa, or together with colleagues and customers.

To use the full functionality, we recommended setting up a SiePortal account for both cases. This gives you access to prices and enables you to save your projects to our cloud.

You can find additional information about TIA Selection Tool at: www.siemens.com/tia-selection-tool

Drive dimensioning with SIZER in TIA Selection Tool (desktop version)

Application-specific requirements can be determined using drive technology dimensioning in TIA Selection Tool. This can include motors, gearboxes, converters and cables. The tool supports the configuration and dimensioning of control functions with an open and closed control loop. The technical documentation with features of the technical drive system, as well as a product list for ordering via SiePortal can also be compiled.

© Siemens 2025

Overview

SINAMICS Selector app: Your guide to frequency converters

Finding the right frequency converter for your application can be a challenge. But SINAMICS Selector app makes your selection process quick and easy – reducing it to just a few clicks.
As an app, the digital guide is accessible even on the go.
It helps you navigate the comprehensive range of SINAMICS converters and guides you reliably to the one that matches your application.

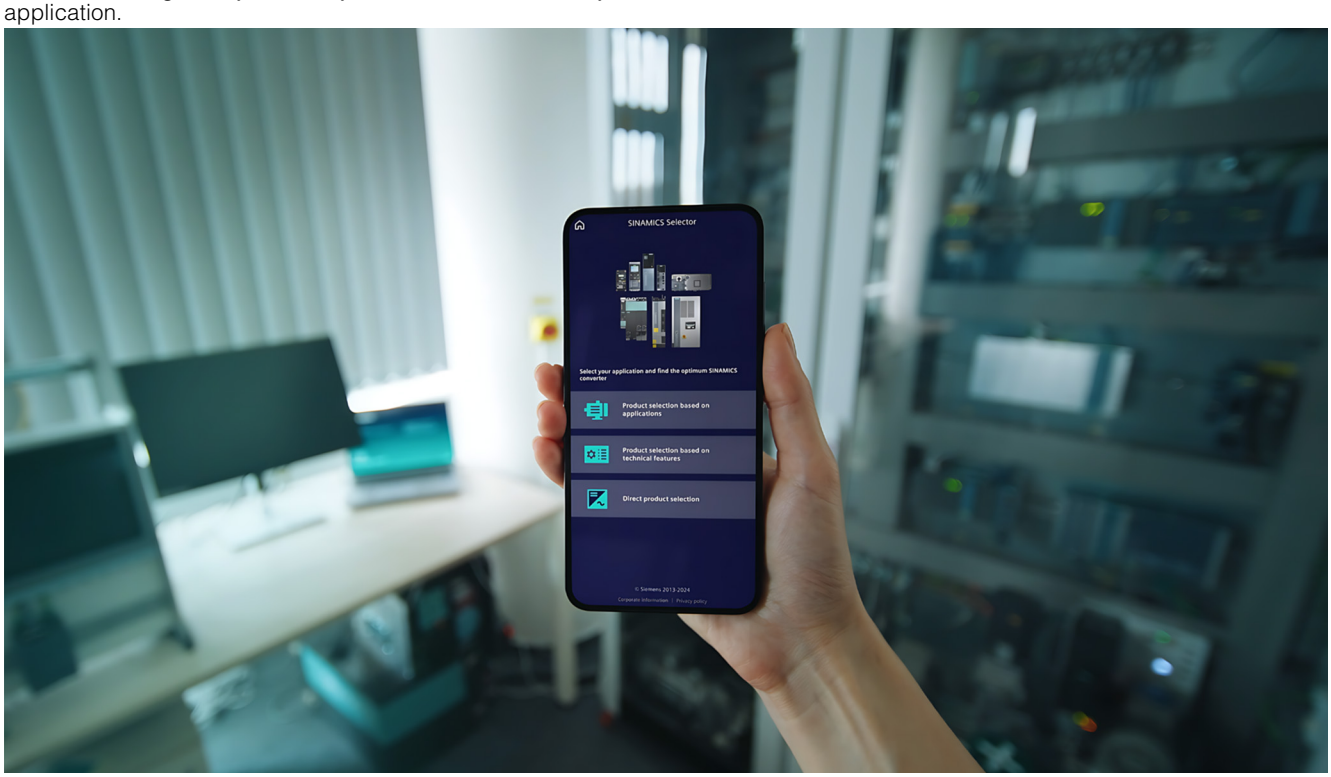

Drive selection on the go: benefits at a glance

SINAMICS Selector app is designed to help you find the right frequency converter easily and quickly. To ensure that the app is accessible to everyone, we prioritized a clear structure and functional design. In addition, the selection process consists of only five steps. In this way, SINAMICS Selector app offers a smart, swift and smooth path to select and purchase your converter.

You will find free downloads for Android and iOS here:
www.siemens.com/sinamics-selector

© Siemens 2025

Overview

Web server for efficient commissioning, diagnostics, maintenance and operator control and monitoring, any time, from anywhere

Thanks to the web server, the SINAMICS S200 drive system offers an efficient commissioning, diagnostics, maintenance option as well as operation and monitoring functions. The user is supported by a help function and additional links to specific product information, downloads, FAQs and manuals.

The web server provides access to a multi-faceted range of new options for commissioning or parameter assignment, drive diagnostics, remote maintenance as well as operator control and monitoring for any networked PC with a web browser or for tablets and smartphones (via a separate WLAN access point, such as SINAMICS Smart Adapter).

The following provides an insight into the functionality offered.

The start screen offers a quick overview of the state of the drive

- Drive type, connected motor as well as the article number and installed firmware
- Important drive parameters show the operating state (can be configured)
- The connection overview provides information about the status of the connections (operating unit - converter - motor)
- Overview of all pending fault and warning messages

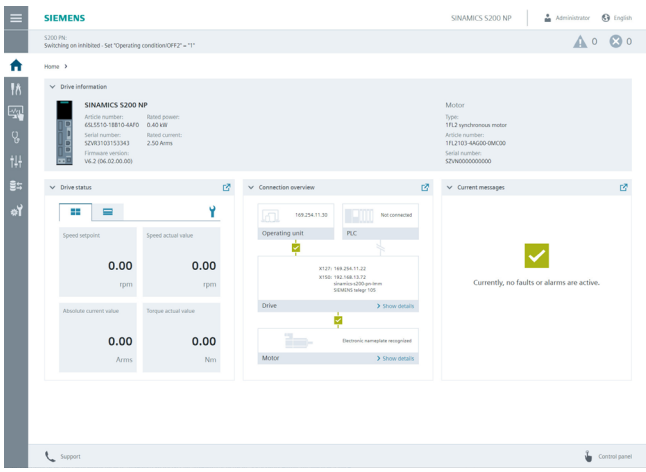

Start screen of the web server integrated into SINAMICS S200

Commissioning

- The quick commissioning provides information about the current motor/encoder and offers the configuration of limit values and digital inputs
- Advanced commissioning defines drive options and functions to suit your application. Advanced commissioning includes all the settings of quick commissioning, as well as additional options and functions.
- Optimization of the drive settings using One Button Tuning (OBT)

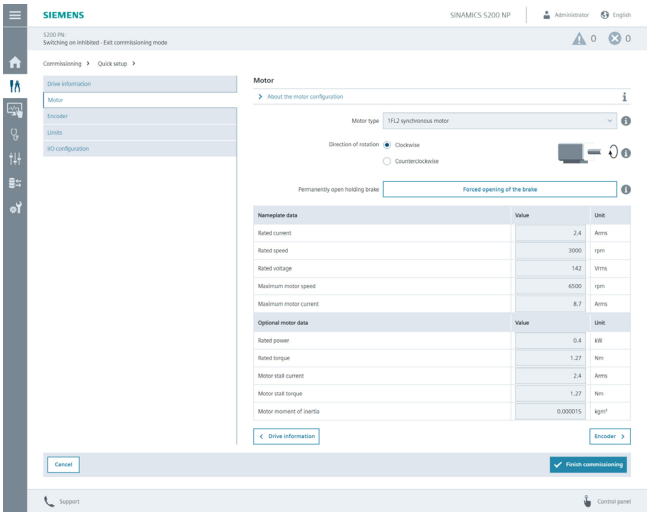

Quick commissioning SINAMICS S200, PROFINET version, with open dialog showing the set motor data

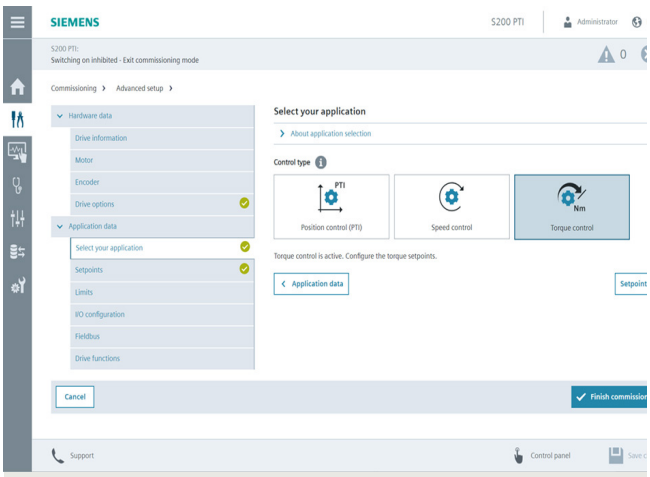

Advanced commissioning of SINAMICS S200, Pulse Train Input version (PTI), with open dialog for application selection

© Siemens 2025

Overview

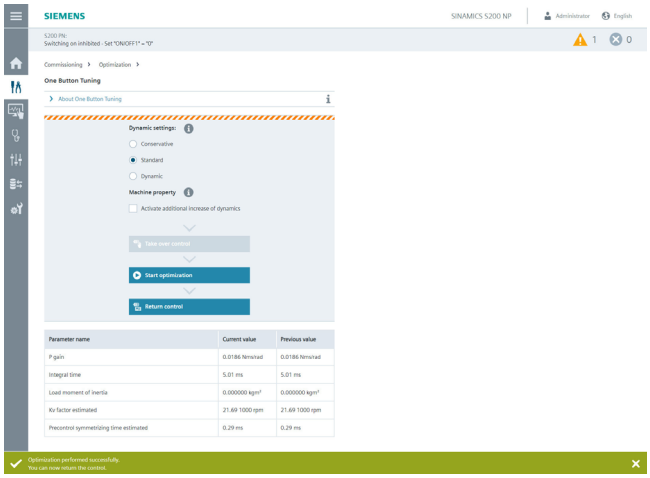

One Button Tuning (OBT)

Operator control and monitoring

- Configurable drive status with value or trend display
- Status of the digital inputs
- Drive traversing via the control panel, which can be freely positioned on the screen

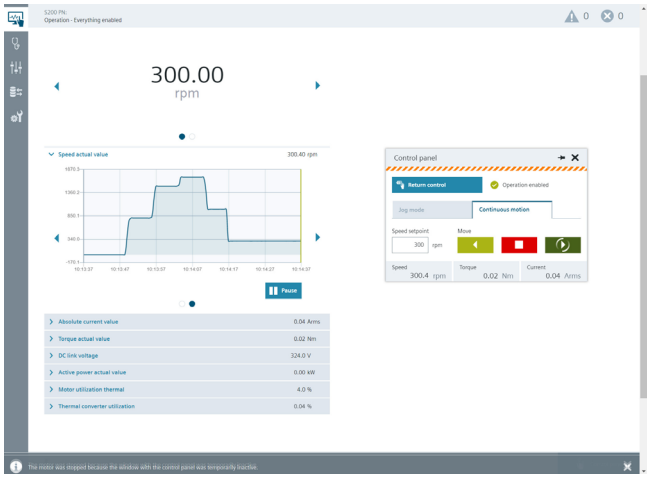

Operator control and monitoring of the drive with the help of the drive status and control panel

Diagnostics

- Evaluation of warnings and fault messages
- Evaluation of system events (diagnostic buffer)
- Analysis of the safety status
- Connection overview, diagnostics of the drive communication and control and status words

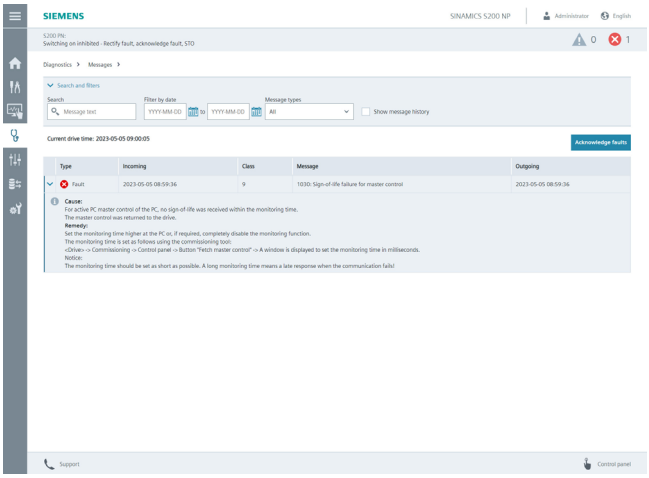

Alarm view with convenient search and filter functions

Service and maintenance functions

- Monitor and adjust drive parameters
- Create, import and export user-specific parameter lists
- Back up and restore the drive configuration
- Perform firmware update, also via the network
- Manage software licenses
- Configure basic settings for the drive and web server (e.g. date and time of the drive)
- Configure and manage user accounts and access controls (UMAC)

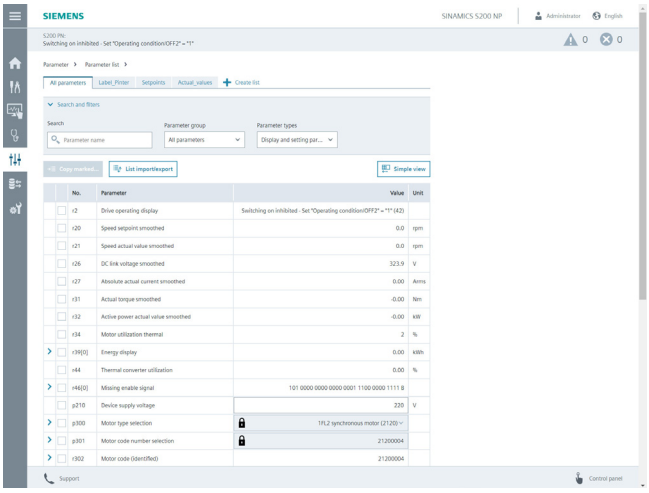

Parameter list for quick access to drive parameters, also via user-defined parameter lists

© Siemens 2025

Overview

Support

- Operator support with comprehensive information about the drive and user interface
- Easy access to product information such as FAQs, software downloads, manuals and certificates
- When storing the html documentation on the drive memory card, the user manual can be accessed in a context-sensitive manner from the user interface
- The diagnostics report supports the support with basic information on the current status of the converter, e.g. in the event of a malfunction or error. The diagnostics report always contains the drive, motor and encoder data and, optionally, an overview of the errors and messages that have occurred.

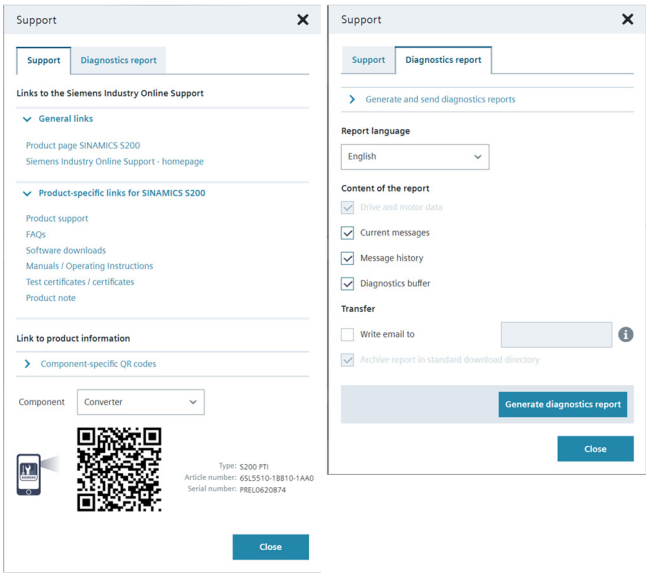

Support dialog for quick access to product-specific information

Benefits

Simple and fast commissioning

- Installation of additional commissioning software is not required. Tools required for the commissioning are ready to use via the integrated web server.
- Standard pages to set thresholds and onboard inputs
- Simple controller optimization with One Button Tuning (OBT)
- Extensive online help with context-sensitive access to the Operating Instructions (memory card required)

Shorter machine downtimes

- Quick overview of the current configuration and the state of the drive
- Efficient diagnostics and maintenance
- Understandable diagnostic information and messages, including the causes of issues and possible remedies, are displayed in plain text in multiple languages
- Context-sensitive help with optional access to the web-based device documentation provides quick help with questions about drive functions

Convenient service and maintenance functions

- Quick backup and restoration of the drive data
- Convenient firmware update, also via the network
- Convenient access to drive parameters
- User-defined parameter lists that focus on what matters
- Easy and efficient handling of the parameter list by using search functions and filters (e.g. parameter groups, parameter types)
- Easy exchange with operating personnel by importing/exporting user-defined parameter lists.
- User-defined parameter lists can be exchanged between the SINAMICS Startdrive and the web server.
- The generation and dispatch of a diagnostics report supports communication with service personnel or machine builders.

Direct language selection

- English, French, German, Italian, Spanish, Chinese Simplified

Accessibility

- Via all LAN or PROFINET interfaces
- Use of mobile devices (e.g. notebooks/tablets and smartphones) via WLAN e.g. with SINAMICS Smart Adapter or a separate access point
- Access to the web server via PCs/notebooks, SIMATIC HMI (> 10”), smartphones/tablets with a Chromium-based internet browser

Access security

- Protection against unauthorized access to the drive functions and data
- Convenient user administration that supports a roles concept
- Easy set-up and management of user accounts

Application

The web server is ideal for applications not requiring any special commissioning software or version dependencies. Commissioning, diagnostics and maintenance as well as operator control and monitoring are possible both locally and remotely, provided appropriate security measures are applied.

© Siemens 2025

Integration

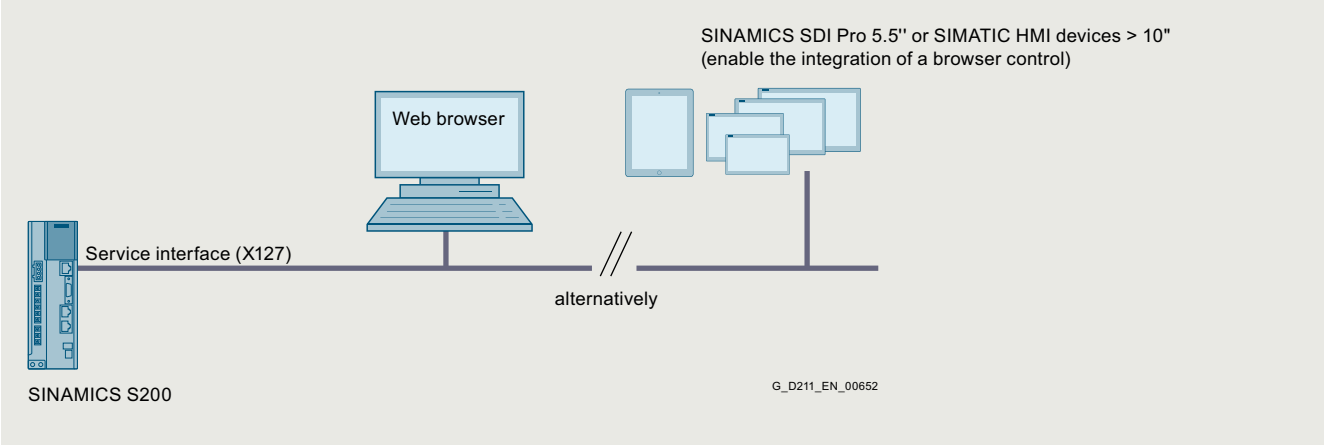

Integration of the SINAMICS web server based on the example of a SINAMICS S200 and the service interface (X127)

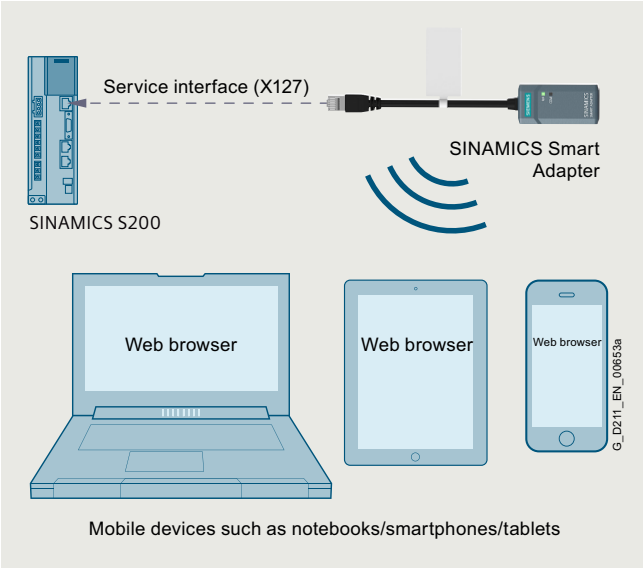

Wireless access to the web server via the service interface (X127) of the SINAMICS S200 with the help of the SINAMICS Smart Adapter

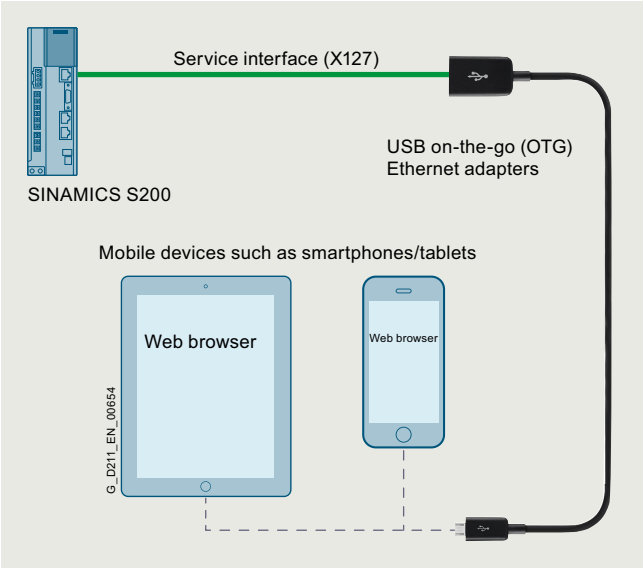

Access to the web server via the service interface (X127) of the SINAMICS S200 with the help of a USB on-the-go (OTG) Ethernet adapter

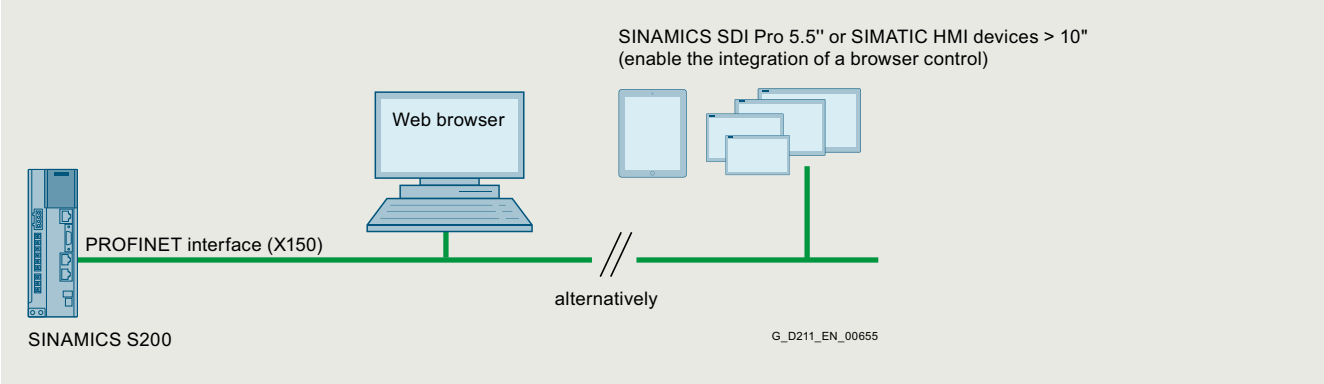

Integration of the SINAMICS web server based on the example of a SINAMICS S200 and the PROFINET interface (X150) as connected web client (e.g. PC, SIMATIC HMI etc.)

© Siemens 2025

Overview

SINAMICS Startdrive is integrated in the TIA Portal and is a tool for the configuration, commissioning and diagnostics of the SINAMICS family of converters.

The SINAMICS Startdrive commissioning tool has been optimized with regard to user friendliness and consistent use of the TIA Portal benefits of a common working environment for PLC, HMI and drives. Time-saving and guided step-by-step commissioning with maximum flexibility is complemented by user-friendly graphic function views for all drive functions, including functional safety (Safety Integrated) and drive-based technology functions (e.g. EPOS). The automatic message display, the powerful real-time trace and the context-sensitive online help make converter diagnostics very easy.

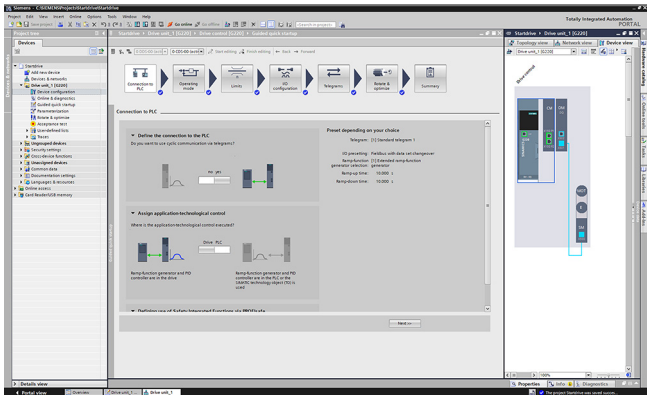

The software packages based on the TIA Portal are harmonized with each other and offer important benefits, the main advantage being a shared project storage. The TIA Portal enables simple integration of SINAMICS converters in your automation solution. Thanks to the standardization of operator actions and the integration in general TIA Portal operating concepts (e.g. UMAC, Openness) as well as standard TIA Portal functions (e.g. Undo/Redo), familiarization is easy both for drive experts as well as SIMATIC users. Special focus is placed on the interaction between SIMATIC and SINAMICS, especially when connecting the SINAMICS drives to SIMATIC technology objects.

Integration

Supported frequency converters

SINAMICS Startdrive Basic enables complete commissioning, diagnostics, parameterization, optimization and connection to the PLC for the following SINAMICS converters integrated in SINAMICS Startdrive:

- SINAMICS G120, G120C, G120D, G120P
- SINAMICS G115D
- SINAMICS G130, G150
- SINAMICS G220 (as of V18 SP2 Update 1)
- SINAMICS S120 [1], S150
- SINAMICS S200 (as of V18 SP2)
- SINAMICS S210 (6SL3...) and innovated SINAMICS S210 (6SL5...) (as of V18 SP1)
- SINAMICS MV

SINAMICS Startdrive Advanced

With SINAMICS Startdrive Advanced (available as of V15) you benefit from powerful engineering functions that save you considerable time and ultimately costs.

- Safety acceptance test:
  - Guided acceptance test wizard for all drive-based Safety Integrated functions
  - Automatic and safety function-specific generation of traces to analyze the machine behavior
  - Generation of an acceptance report as Excel file (xlsx format, can also be used with OpenOffice)
- Improved optimization options in the drive: Extended measuring functions (available for CU320-2 PN/DP and CU310-2 PN as of V5.2 SP3, SINAMICS S210 (6SL5...) as of V6.1 and SINAMICS S200 as of V6.2), long-term trace
- Export of backup files from the Startdrive project
- Also contains all Startdrive Basic functions
- Only license key required, no additional installation

New in V20

Startdrive Basic V20

- Comparison of drive parameters between different drives
- Trace templates for easy creation of trace configurations
- Unit Switching (SI/US Units)
- Integration of the drive version V6.4 for SINAMICS G220, S200, S210 (6SL5...):
  - Introduction of OPC UA server functionality for devices from V6.4

Startdrive Advanced V20

- Export of backup files for drives from V6.x for efficient roll-out of drive parameterizations via SD card

Installation versions

SINAMICS Startdrive can only be installed as an option package for SIMATIC STEP 7. However, a SIMATIC STEP 7 license is not required to run SINAMICS Startdrive.

System requirements

The following table shows the recommended hardware and system equipment for the operation of SINAMICS Startdrive.

Hardware	Recommendation
Computer	As of SIMATIC FIELD PG M6 Comfort (or comparable PC)
Processor	Intel Core i5-8400H (2.5 ... 4.2 GHz; 4 cores + hyper-threading; 8 MB Smart Cache)
RAM	16 GB or more (32 GB for large projects)
Hard disk	SSD with at least 50 GB available memory
Screen resolution	15.6" Full HD display (1920 × 1080 or larger)
Operating systems	• **Microsoft Windows 10 (64 bit)** - Windows 10 Professional Version 22H2 - Windows 10 Enterprise 21H2, 22H2 - Windows 10 Enterprise 2019 LTSC - Windows 10 Enterprise 2021 LTSC • **Microsoft Windows 11 (64 bit)** - Windows 11 Home Version 22H2, 23H2 - Windows 11 Professional Version 22H2, 23H2 - Windows 11 Enterprise 22H2, 23H2 • **Microsoft Windows Server (64 bit)** - Windows Server 2019 Standard (full installation) - Windows Server 2022 Standard (full installation)

[1] Includes SINAMICS S220 Smart Line Modules booksize format as of SINAMICS Startdrive V17 Update 1.

© Siemens 2025

Integration

Compatibility with other products

- SINAMICS Startdrive V20 operates with STEP 7, WinCC and Scout TIA V20 in one framework
- SINAMICS Startdrive V20 can be installed on the same computer in parallel with other versions of SINAMICS Startdrive V12 to V19
- SINAMICS Startdrive can be installed on the same computer as SINAMICS MICROMASTER STARTER

Supported virtualization platforms

SINAMICS Startdrive can be installed in a virtual machine. For this purpose, one of the following virtualization platforms in the specified version or a newer version can be used:

- VMware vSphere Hypervisor (ESXi) 8.0 or higher
- VMware Workstation 17.0 or higher
- VMware Player 17.0 or higher
- Microsoft Hyper-V Server 2019 or higher

Supported safety programs

The following safety programs have been tested with SINAMICS Startdrive V20:

- Virus scanners:
  - Symantec Endpoint Protection 14.3 RU8
  - Trend Micro Apex One
  - McAfee Endpoint Security (ENS) 10.7
  - Microsoft Defender
  - Qihoo 360 (Safe Guard and Virus Scanner)
  - Crowdstrike Falcon Go (Falcon Prevent and Falcon Device Control)
- Encryption software:
  - Microsoft Bitlocker
- Host-based Intrusion Detection System
  - McAfee Application Control 8.4 (Trellix)

Selection and ordering data

Description	Article No.
SINAMICS Startdrive Basic V20 SP1 commissioning tool Single license and certificate of license English, French, German, Italian, Spanish, Chinese Simplified • Software download (email address required for delivery)	**6SL3072-4LA02-0XG0**
SINAMICS Startdrive Advanced V20 SP1 commissioning tool License key (floating license) English, French, German, Italian, Spanish, Chinese Simplified • On DVD-ROM with license key on USB flash drive	**6SL3072-4LA02-0XA5**
• Software download incl. license key (email address required for delivery)	**6SL3072-4LA02-0XG5**
Upgrade SINAMICS Startdrive Advanced V15 ... V19 to V20 • On DVD-ROM with license key on USB flash drive	**6SL3072-4LA02-0XE5**
• Software download incl. license key (email address required for delivery)	**6SL3072-4LA02-0XK5**
Software Update Service with SINAMICS Startdrive Advanced in the TIA Portal Delivery is performed according to the number of ordered SUS products (e.g. 10 upgrade license keys (floating license) with 10 DVD-ROMs, 10 USB flash drives, etc.) • On DVD-ROM with upgrade license key on USB flash drive	**6SL3072-4AA02-0XL8**
• Software download incl. license key (email address required for delivery)	**6SL3072-4AA02-0XY8**

Accessories

Depending on the version of the Control Unit (CU), the Control Unit of the drive unit can communicate with the programming device (PG) or PC via PROFIBUS or PROFINET/Ethernet or via a serial interface. The following accessories are available for the particular drive system as listed in the following table.

Recommended accessories
For communication between the drive unit and the programming device or PC

Description		Article No.
SINAMICS S200		
• Wi-Fi	**SINAMICS Smart Adapter** Wi-Fi solution for the next generation of SINAMICS converters SINAMICS S200, SINAMICS S210 (6SL5...) and SINAMICS G220	**6SL4950-0AJ00-0AA0**

More information

The SINAMICS Startdrive Basic commissioning tool is available free on the internet at
www.siemens.com/startdrive

© Siemens 2025

Services and documentation

6

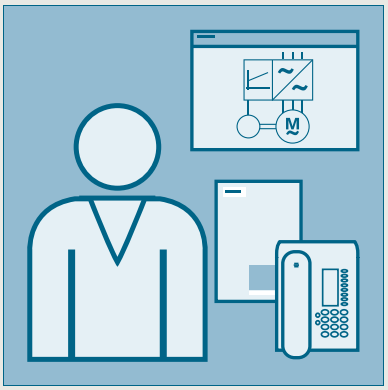

6/2 **Partner**

6/3 **Digital Enterprise Services**

6/4 **Training**
6/4 SITRAIN – Digital Industry Academy
6/6 SINAMICS S200 training cases

6/7 **Applications**

6/8 **mySupport documentation**

6/9 **Documentation**
6/10 General documentation
6/10 SINAMICS S200 documentation

© Siemens 2025

Overview

Partner at Siemens

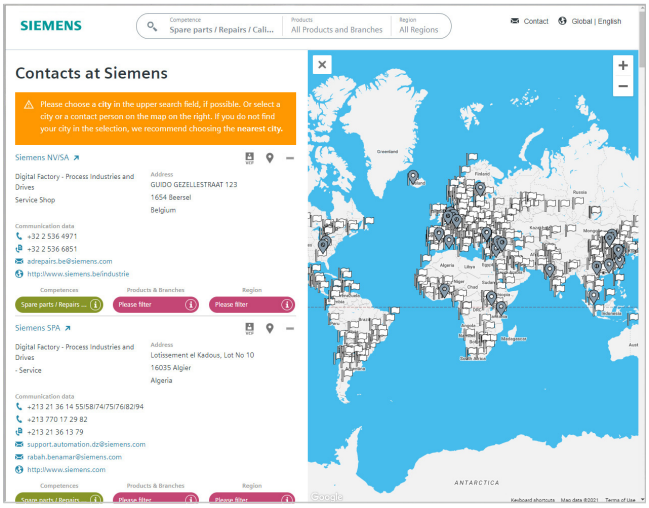

At your service locally, around the globe for consulting, sales, training, service, support, spare parts on the entire portfolio of Siemens.

Your partner can be found in our Personal Contacts Database at:
www.siemens.com/automation-contact

You start by selecting

- the required competence,
- products and branches,
- a country and a city

or by a

- location search or free text search.

© Siemens 2025

Overview

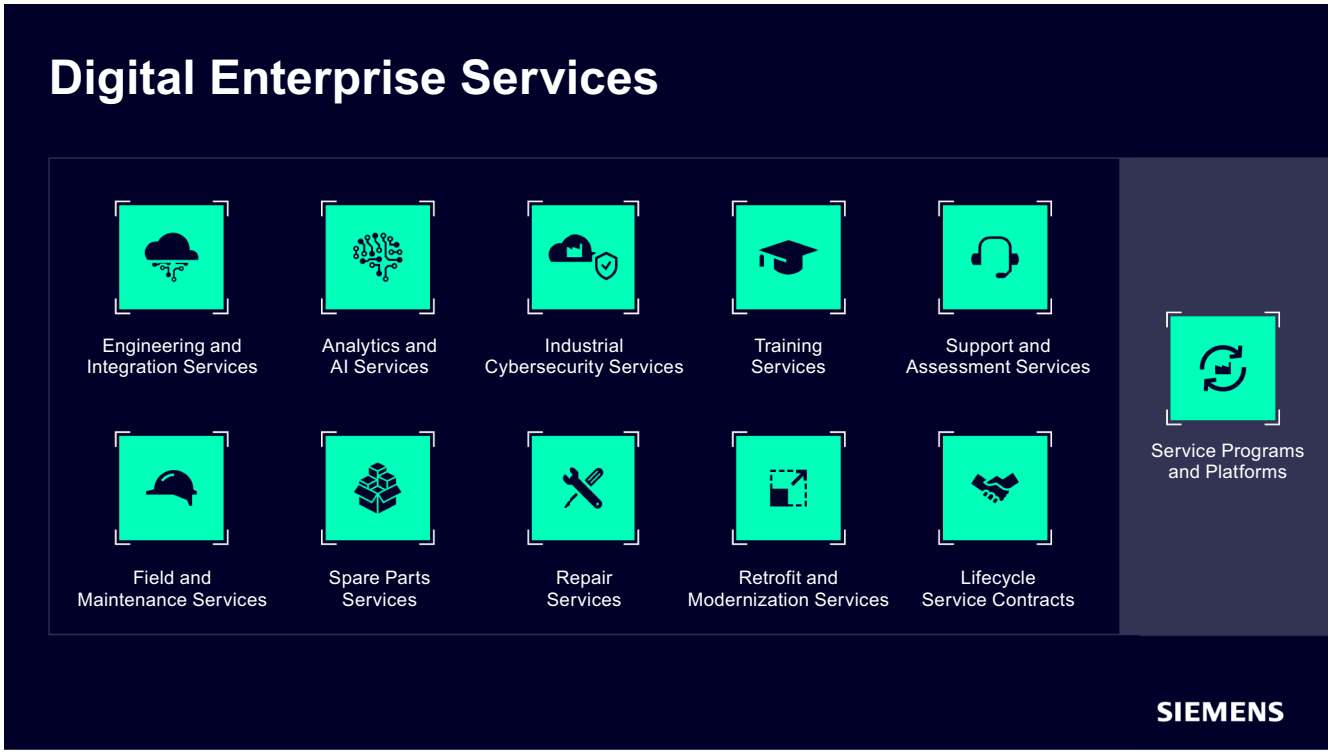

At Digital Enterprise Services, we provide you with comprehensive services throughout the entire lifecycle. From a fully digital factory to a reliable spare parts supply and quick support in the event of outages, we work with our partners to ensure your plant operates optimally – improving availability, productivity, and efficiency.

Our services take industry to the next level and give you a competitive edge:

- **Services for Digital Transformation:**
  Our innovative and scalable services streamline operations by optimizing your Overall Equipment Effectiveness (OEE), increasing productivity, preventing outages and improving business continuity – all while supporting IT/OT convergence.
- **Services for Sustainability:**
  Our optimization and lifetime extension services help make your sustainability goals a reality by providing data-driven insights into energy use, enabling you to reduce your carbon footprint and costs. By enabling a circular economy and focusing on product safety, cybersecurity, and supply chain visibility, we extend asset life, save resources, and improve operational efficiency.
- **Lifecycle Services:**
  Our innovative Lifecycle Services provide reliable support worldwide, offering tailored solutions throughout their entire lifecycle. By optimizing maintenance processes, we improve asset performance, efficiency, reliability, and productivity – from machines to entire plants or factories.

For more information, please visit us at:

www.siemens.com/digital-enterprise-services

www.siemens.com/find-your-service

© Siemens 2025

Introduction

Lern the way you like it – with SITRAIN

SITRAIN imparts a wide range of technical knowledge for all industries and applications. Our offering is oriented toward the needs of learners and the demands of innovative companies. Get pleasure out of learning - thanks to innovative learning methods, personal support, and knowledge that will help you in your work and further development. For successful, flexible, and continuous learning.

Education and training directly from the manufacturer

SITRAIN provides you with training from the industrial product and solution portfolio from Siemens and benefits from 30 years of expertise in technical training. Take a look at the many options for expanding your knowledge with SITRAIN and find the course that meets your needs! The following training and further education units are available to you for your individual knowledge building:

Industrial Automation Systems SIMATIC
Training available for:
SIMATIC S7-1500. TIA Portal,
SIMATIC S7-300/400,
SIMATIC S7-1200

Drive Technology
Training available for:
SINAMICS S120 and
SINAMICS G120 low-voltage converters,
SINAMICS G130 / G150 / G180 / S150

SINUMERIK CNC automation system
Training available for:
SINUMERIK 840D, SINUMERIK 840D sl and SINUMERIK ONE

Process Control Systems
Training available for:
SIMATIC PCS 7,
SIMATIC PCS neo

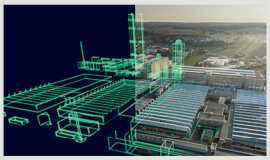

Digital Enterprise
Training available for:
Openness, SIMIT, OPC UA,
Industrial Edge,
Virtual commissioning

Industrial Communications
Training available for:
PROFINET, SCALANCE,
RUGGEDCOM, Industrial Ethernet,
Fieldbus communication,
Industrial Security,
Remote communication

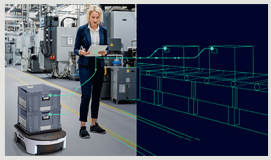

Identification and Locating
Training available for:
RFID, RTLS-Systems

Operator Control and Monitoring Systems
Training available for:
SIMATIC WinCC Unified in TIA Portal, SIMATIC WinCC in TIA Portal, SIMATIC WinCC V7x

Motion Control System SIMOTION
Training available for:
SIMOTION (Programming,
Commissioning, Diagnostics,
Service)

Smart Infrastructure
Training available for:
SIRIUS, SENTRON, SIVACON,
ALPHA, SIMOCODE,
Circuit breakers

Process Analytics & Instrumentation
Training is available for process analytics and instrumentation, explosion protection, process gas chromatographs

Additional training offer
SIMOVE with Automated Guided Vehicles (AGV),
SIPLUS CMS, Guidelines and standards for control cabinets

© Siemens 2025

Introduction

Different learning formats and methods for maximum learning success

With our SITRAIN training formats, you learn in the way that best suits your preferences and routine. You decide whether you would rather take online training or face-to-face training. It is up to you whether you would like to study on demand or at fixed times.

With a personal learning consultant, in the team, or on your own – you can explore all the possibilities.

Discover our three learning formats:

Learning Event

SITRAIN Learning Events are the perfect choice when you want to achieve a defined learning goal in the shortest possible time. You learn in a protected learning environment outside of the daily work routine under the guidance of a learning consultant - virtually, in the training center, or at your company.

Learning Membership SITRAIN Access

With SITRAIN access, you enter a world of extensive and constantly expanding self-study units on our digital learning platform for industry. With SITRAIN access, you can implement a modern learning culture in your team or company with independent and continuous learning.

Learning Journey

The Learning Journey is the perfect combination of units taken live and self-study units for sustainable learning success. The modular approach enables simple integration into your daily work. This also includes one-year membership for using the SITRAIN access digital learning platform.

Live

Learn together with others, simultaneously and guided by a learning consultant. Online, in the SITRAIN training center or at your company.

Self-reliant

Expand your knowledge self-determined with industry learning and work on your learning units at your own pace and according to your own schedule.

On demand

Get the knowledge you need, exactly when you need it. Be it to answer a current question or to work on a special topic.

Individuell

Talk directly with the learning consultant, clarify detailed questions and get personal coaching for transferring the learned topics to your own application.

Training cases catalog

www.siemens.com/
sitrain-catalog-training-cases

www.siemens.com/sitrain

Find
your local
offer here

© Siemens 2025

SINAMICS S200 training case

Overview

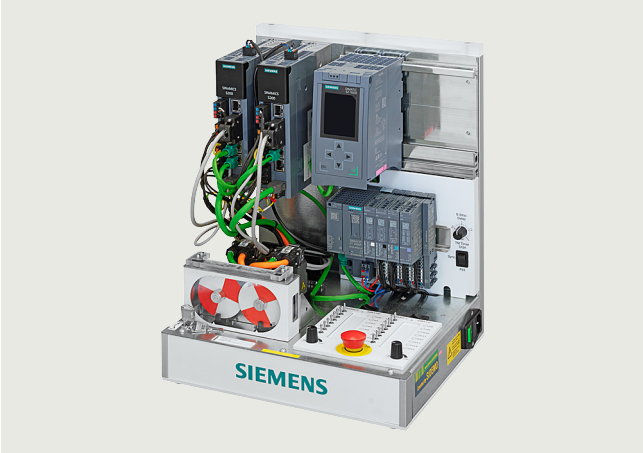

Example: SINAMICS S200 training case PROFINET version

Selection and ordering data

Description	Article No.
SINAMICS S200 training case PROFINET version Scope of delivery: • 2 × SINAMICS S200 servo converter, PROFINET version, 200 V, 100 W • 1 × SIMOTICS S-1FL2 Low Inertia servomotor, absolute encoder 21-bit singleturn • 1 × SIMOTICS S-1FL2 Low Inertia servomotor, absolute encoder 21-bit singleturn + 12-bit multiturn • 2 × Pre-assembled dual motor connection cable • Rail, prepared for installation of a controller, e.g. SIMATIC S7-1500 (controller not included in scope of delivery) • SIMATIC ET 200SP, PROFINET Interface Module The SINAMICS S200 training case PROFINET version is supplied as a trolley with a hood.	**6AG1067-1AA42-0AA0**
SINAMICS S200 training case Pulse Train Input version (PTI) Scope of delivery: • 1 × SINAMICS S200 servo converter, Pulse Train Input version (PTI), 200 V, 100 W • 1 × SIMOTICS S-1FL2 Low Inertia servomotor, absolute encoder 21-bit singleturn + 12-bit multi-turn • 1 × Pre-assembled dual motor connection cable • 1 × SIMATIC S7-1200, compact CPU, CPU 1211C, DC/DC/DC • 1 × SIMATIC S7-1200, Communication Board CB 1241, RS485 The SINAMICS S200 training case Pulse Train Input version (PTI) is supplied as a trolley with a hood.	**6AG1067-1AA43-0AA0**

© Siemens 2025

Overview

Our understanding of an application is the customer-specific solution of an automation task based on standard hardware and software components. In this respect, industry knowledge and technological expertise are just as important as expert knowledge about how our products and systems work. We are setting ourselves this challenge with more than 280 application engineers in 20 countries.

Application centers

We currently have application centers in:

- Germany:
  Head Office in Erlangen and in other German regions, e.g. in Munich, Nuremberg, Stuttgart, Mannheim, Frankfurt, Chemnitz, Cologne, Bielefeld, Bremen, Hanover, Hamburg
- Belgium: Brussels
- Brazil: Sao Paulo
- China: Beijing and 12 regions
- Denmark: Ballerup
- France: Paris
- Great Britain: Manchester
- India: Mumbai
- Italy: Bologna, Milan
- Japan: Tokyo, Osaka
- The Netherlands: The Hague
- Austria: Vienna
- Poland: Warsaw
- Sweden: Göteborg
- Switzerland: Zurich, Lausanne
- Spain: Madrid
- South Korea: Seoul
- Taiwan: Taipei
- Turkey: Istanbul
- USA: Atlanta

These application centers specialize in the use of SIMATIC/SIMOTION/SINAMICS. You therefore can rely on automation and drive specialists for implementing successful applications. By involving your personnel at an early stage in the process, we can provide a solid basis for rapid knowledge transfer, maintenance and further development of your automation solution.

Advice on applications and implementation

We offer a variety of consultation services to help you find the optimum solution for the SIMATIC/SIMOTION/SINAMICS application you want to implement:

The quotation phase includes

- clarification of technical questions,
- discussion of machine concepts and customer-specific solutions,
- selection of suitable technology and
- suggestions for implementation.

A technical feasibility study is also performed at the outset. In this way, difficult points of the application can be identified and solved early on. We can also configure and implement your application as a complete solution from a single source.

A large number of proven standard applications are available for use during the implementation phase. This saves engineering costs.

The system can be commissioned by experienced, competent personnel, if required. This saves time and trouble.

If servicing is required, we can support you on site or remotely. For further information about servicing, please see the section "Industry Services".

On-site application training

Training for the implemented applications can also be organized and carried out on site. This training for machine manufacturers and their customers does not deal with individual products, but the entire hardware and software system (for example, automation, drives and visualization).

From an initial concept to successful installation and commissioning: We provide complete support for SIMATIC/SIMOTION/SINAMICS! Contact your Siemens representative.

You can find further information at
www.siemens.com/machinebuilding

© Siemens 2025

Overview

mySupport documentation – Compiling personal documents

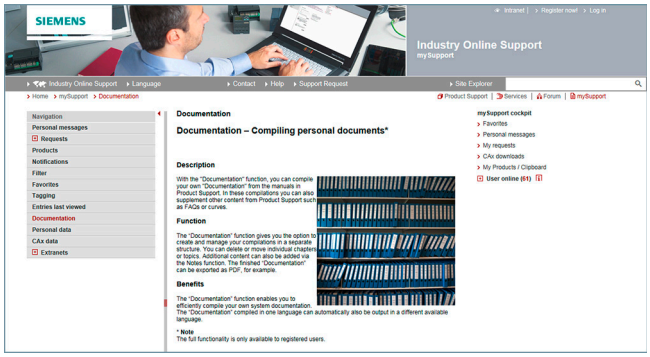

mySupport documentation is a web-based system for generating personalized documentation based on standard documents and is part of the Siemens Industry Online Support portal.

In mySupport, a personal document library can be created in the "Documentation" category. This library can be accessed online in mySupport or also be generated in various formats for offline use.

Previously, this functionality was available in the My Documentation Manager for configurable manuals. Due to the integration in mySupport, all entries of the Industry Online Support can now be imported into the personal document library, including FAQs or product notifications.

If you have already worked with the My Documentation Manager, all of the previously created libraries will continue to be available without restrictions in mySupport.

In addition, the personal library in mySupport can be shared with other mySupport users. In this way, a collection of relevant documents can be created very effectively and used together with other mySupport users all over the world.

You must register/log in for configuring and generating/managing.

Benefits

- Display
  View, print or download standard documents or personalized documents
- Configure
  Transfer standard documents or parts of them to personalized documents
- Generate/Manage
  Generate and manage personalized documents in the formats PDF, RTF or XML in all available languages

Function

Opening mySupport documentation in the Industry Online Support portal

- Via the product support, entry type "Manual":
  https://support.industry.siemens.com/cs/ww/en/ps/man
  By clicking on the required version of the manual and then "Show and configure", the manual opens in a modular view, where you can navigate from topic to topic. Here the direct link to a topic can be used and made available to other users. The selected document can be added to the personal library via "mySupport Cockpit" > "Add to mySupport documentation".
- Via the direct link
  https://support.industry.siemens.com/my/ww/en/documentation/advanced
  After logon/registration, the online help is displayed as the current document.

More information

You can find additional information on the internet at

- https://support.industry.siemens.com/my/ww/en/documentation
- https://support.industry.siemens.com/cs/helpcenter/en/index.htm?#persoenliche_bibliothek_aufbauen.htm

© Siemens 2025

Overview

A high-quality programmable control or drive system can be used to maximum effect only if the user is aware of the performance of the products used as a result of intensive training and good technical documentation.

This is becoming more important due to the shorter innovation cycles of modern automation products and the convergence of electronics and mechanical engineering.

A comprehensive range of documentation is available which includes a Getting Started guide, operating instructions, installation manuals and a list manual.

In addition to technical information for SINUMERIK, SINAMICS, SIMOTION and SIMOTICS, the documentation is available for downloading as a PDF file from the internet:

- SINUMERIK
  https://support.industry.siemens.com/cs/document/108464614
- SINAMICS
  https://support.industry.siemens.com/cs/document/109807358
- SIMOTION
  https://support.industry.siemens.com/cs/document/109479653
- SIMOTICS
  https://support.industry.siemens.com/cs/document/109813641

Application

Explanations of the manuals:

- **Operating Instructions**
  contain all the information needed to install the device and make electrical connections, information about commissioning and a description of the converter functions.
  Phases of use: Control cabinet construction, commissioning, operation, maintenance and servicing.
- **Hardware Installation Manual**
  contains all relevant information about the intended use of the components of a system (technical specifications, interfaces, dimensional drawings, characteristics, or possible applications), information about installation and electrical connections and information about maintenance and servicing.
  Phases of use: Control cabinet configuration/construction, maintenance and servicing.
- **Operating and Installation Instructions**
  (for converter and accessories)
  contain all relevant information about the intended use of the components, such as technical specifications, interfaces, dimensional drawings, characteristics, or possible applications.
  Phases of use: Control cabinet configuration/construction.
- **Manual/Configuration Manual**
  contains all necessary information about the intended use of the components of a system, e.g. technical specifications, interfaces, dimensional drawings, characteristics, or possible applications.
  Phases of use: Cabinet configuration/setup, circuit diagram configuration/drawing.
- **Commissioning Manual**
  contains all information relevant to commissioning after installation and wiring. It also contains all safety and warning notices relevant to commissioning in addition to overview drawings.
  Phases of use: Commissioning of components that have already been connected, configuration of system functions.
- **List Manual**
  contains all parameters, function diagrams, and faults/alarms for the product/system as well as their meanings and setting options. It contains parameter data and fault/alarm descriptions with functional correlations.
  Phases of use: Commissioning of components that have already been connected, configuration of system functions, fault cause/diagnosis.
- **Getting Started**
  provides information about getting started for the first-time user as well as references to additional information. It contains information about the basic steps to be taken during commissioning. The information in the other documentation should be carefully observed for all of the other work required.
  Phases of use: Commissioning of components that have already been connected.
- **Function Manual Drive Functions**
  contains all the relevant information about individual drive functions: Description, commissioning and integration in the drive system.
  Phases of use: Commissioning of components that have already been connected, configuration of system functions.

© Siemens 2025

General documentation

Overview

Description	Article No.
Decentralization with PROFIBUS DP/DPV1	Via bookstore
• German	**ISBN 978-3-89578-189-6**
• English	**ISBN 978-3-89578-218-3**
Automating with PROFINET: Industrial Communication Based on Industrial Ethernet	Via bookstore
• German	**ISBN 978-3-89578-293-0**
• English	**ISBN 978-3-89578-294-7**

SINAMICS S200 documentation

Overview

Identification link according to IEC 61406 for SINAMICS S200

The ID link contains the article and serial number of the product. As a QR code, it replaces the previous data matrix code on the nameplate and takes you with the URL directly to a product information page on the internet with access to the technical documentation, data sheet, certificates, FAQs, product notifications, and catalogs. Paper package inserts become superfluous since the information is available electronically directly via the QR code, even years later. In this way, we are making a valuable contribution to the preservation of our environment. You don't need an additional app. Simply scan the QR code with your smartphone or tablet. According to IEC 61406, the QR code of an ID link is marked with a frame and a triangle at the bottom right.

With their globally unique identifiers, Siemens products are ready for Industry 4.0.

The ID serves as a connection to the administration shell with which modules of the digital twin can be provided.

Further documentation, such as the operating instructions, is available free on the internet at:
www.siemens.com/sinamics-s200/documentation

Detailed information on the SINAMICS S200 drive system, including the latest technical documentation (brochures, tutorials, dimensional drawings, certificates, manuals and operating instructions), is available on the internet at:
www.siemens.com/sinamics-s200

and is also available via the Siemens Product Configurator on the internet.
The Siemens Product Configurator can be found in SiePortal at the following address:
www.siemens.com/sinamics-s200/configuration

© Siemens 2025

Appendix

7/2	Certificates of suitability
7/4	Software licenses
7/6	Conversion tables
7/8	Conditions of sale and delivery

© Siemens 2025

Certificates of suitability

Overview

Many of the products in this Catalog fulfill requirements, e.g. for UL, CSA or FM and are labeled with the corresponding approval designation.

All of the certificates of suitability, approvals, certificates, declarations of conformity, test certificates, e.g. CE, UL, Safety Integrated etc. have been performed with the associated system components as they are described in the Catalogs and Configuration Manuals.

The certificates are only valid if the products are used with the described system components, are installed according to the Installation Guidelines and used for their intended purpose.

In other cases, the vendor of these products is responsible for arranging for the issue of new certificates.

Test code	Tested by	Device series/ Component	Test standard	Product category/ File-No.
UL: Underwriters Laboratories ***Independent public testing body in North America***				
	UL according to UL standard	SINUMERIK	Standard UL 508, CSA C22.2 No. 142	NRAQ/7.E164110 NRAQ/7.E217227
		SIMOTION	Standard UL 508, CSA C22.2 No. 142	NRAQ/7.E164110
	UL according to CSA standard UL according to UL and CSA standards	SINAMICS	Standard UL 508, 508C, 61800-5-1 CSA C22.2 No. 142, 274	NRAQ/7.E164110, NMMS/2/7/8.E192450, NMMS/2/7/8.E203250, NMMS/7.E214113, NMMS/7.E253831 NMMS/2/7/8.E121068 NMMS/7.E355661 NMMS/7.E323473
	UL according to UL standard	SIMODRIVE	Standard UL 508C, CSA C22.2 No. 274	NMMS/2/7/8.E192450 NMMS/7.E214113
	UL according to CSA standard UL according to UL and CSA standards	SIMOTICS	Standard UL 1004-1, 1004-6, 1004-8, CSA C22.2 No. 100	PRGY2/8.E227215 PRHZ2/8.E93429 PRHJ2/8.E342747 PRGY2/8.E253922 PRHZ2/8.E342746
		Line/motor reactors	Standard UL 508, 506, 5085-1, 5085-2, 1561, CSA C22.2 No. 14, 47, 66.1-06, 66.2-06	XQNX2/8.E257859 NMTR2/8.E219022 NMMS2/8.E333628 XPTQ2/8.E257852 XPTQ2/8.E103521 NMMS2/8.E224872 XPTQ2/8.E354316 XPTQ2/8.E198309 XQNX2/8.E475972
		Line filters, dv/dt filters, sine-wave filters	UL 1283, CSA C22.2 No. 8	FOKY2/8.E70122
		Resistors	UL 508, 508C, CSA C22.2 No. 14, 274	NMTR2/8.E224314 NMMS2/8.E192450 NMTR2/8.E221095 NMTR2/8.E226619
TUV: TUV Rheinland of North America Inc. ***Independent public testing body in North America, Nationally Recognized Testing Laboratory (NRTL)*** ***TÜV: TÜV SÜD Product Service*** ***Independent public testing body in Germany, Nationally Recognized Testing Laboratory (NRTL) for North America***				
	TUV according to UL and CSA standards	SINAMICS	NRTL listing according to standard UL 508C	U7V 12 06 20078 013 U7 11 04 20078 009 U7 11 04 20078 010 U7 11 04 20078 011
		SIMOTION	NRTL listing according to standard UL 508	U7V 13 03 20078 01
		SIMODRIVE	NRTL listing according to standard UL 508C, CSA C22.2. No. 14	CU 72090702
		Motion Control Encoder	NRTL listing according to UL 61010-1 CSA C22.2 No. 61010-1	U8V 10 06 20196 024

© Siemens 2025

Overview

Test code	Tested by	Device series/ Component	Test standard	Product category/ File-No.
CSA: Canadian Standards Association Independent public testing body in Canada				
	CSA according to CSA standard	SINUMERIK	Standard CSA C22.2 No. 142	2252-01 : LR 102527
FMRC: Factory Mutual Research Corporation Independent public testing body in North America				
	FM according to FM standard	SINUMERIK	Standard FMRC 3600, FMRC 3611, FMRC 3810, ANSI/ISA S82.02.1	–
EAC: Independent public testing body within the Eurasian Conformity Area				
	EAC in accordance with the EAC Directive	SINAMICS SINUMERIK SIMOTION	Standard IEC 61800-5-1/-2, IEC 61800-3	–
RCM: Australian Communications and Media Authority Independent public testing body in Australia				
	RCM according to EMC standard	SINAMICS SINUMERIK SIMOTION	Standard IEC AS 61800-3, EN 61800-3	–
KC: National Radio Research Agency Independent public testing body in South Korea				
	KC according to EMC standard	SINAMICS SINUMERIK SIMOTION	Standard KN 11	–
BIA Federal Institute for Occupational Safety				
–	Functional safety	SINAMICS SINUMERIK SIMOTION	Standard EN 61800-5-2	–
TÜV SÜD Rail				
–	Functional safety	SINAMICS SINUMERIK SIMOTION	Standard EN 61800-5-2	–

More information about certificates can be found online at:
https://support.industry.siemens.com/cs/ww/en/ps/cert

© Siemens 2025

Software licenses

Overview

Software types

Software requiring a license is categorized into types.
The following software types have been defined:

- Engineering software
- Runtime software

Engineering software

This includes all software products for creating (engineering) user software, e.g. for configuring, programming, parameterizing, testing, commissioning or servicing.

Data generated with engineering software and executable programs can be duplicated for your own use or for use by third-parties free-of-charge.

Runtime software

This includes all software products required for plant/machine operation, e.g. operating system, basic system, system expansions, drivers, etc.

The duplication of the runtime software and executable programs created with the runtime software for your own use or for use by third-parties is subject to a charge.

You can find information about license fees according to use in the ordering data (e.g. in the catalog). Examples of categories of use include per CPU, per installation, per channel, per instance, per axis, per control loop, per variable, etc.

Information about extended rights of use for parameterization/configuration tools supplied as integral components of the scope of supply can be found in the readme file supplied with the relevant product(s).

License types

Siemens Digital Industries and Smart Infrastructure offers various types of software license:

- Floating license
- Single license
- Rental license
- Rental floating license
- Trial license
- Demo license
- Demo floating license

Floating license

The software may be installed for internal use on any number of devices by the licensee. Only the concurrent user is licensed. The concurrent user is the person using the program. Use begins when the software is started.
A license is required for each concurrent user.

Single license

Unlike the floating license, a single license permits only one installation of the software per license.

The type of use licensed is specified in the ordering data and in the Certificate of License (CoL). Types of use include for example per instance, per axis, per channel, etc.

One single license is required for each type of use defined.

Rental license

A rental license supports the "sporadic use" of engineering software. Once the license key has been installed, the software can be used for a specific period of time (the operating hours do not have to be consecutive).
One license is required for each installation of the software.

Rental floating license

The rental floating license corresponds to the rental license, except that a license is not required for each installation of the software. Rather, one license is required per object (for example, user or device).

Trial license

A trial license supports "short-term use" of the software in a non-productive context, e.g. for testing and evaluation purposes.
It can be transferred to another license.

Demo license

The demo license support the "sporadic use" of engineering software in a non-productive context, for example, use for testing and evaluation purposes. It can be transferred to another license. After the installation of the license key, the software can be operated for a specific period of time, whereby usage can be interrupted as often as required.

One license is required per installation of the software.

Demo floating license

The demo floating license corresponds to the demo license, except that a license is not required for each installation of the software. Rather, one license is required per object (for example, user or device).

Certificate of License (CoL)

The CoL is the licensee's proof that the use of the software has been licensed by Siemens. A CoL is required for every type of use and must be kept in a safe place.

Downgrading

The licensee is permitted to use the software or an earlier version/release of the software, provided that the licensee owns such a version/release and its use is technically feasible.

Delivery versions

Software is constantly being updated.
The following delivery versions

- PowerPack
- Upgrade

can be used to access updates.

Existing bug fixes are supplied with the ServicePack version.

PowerPack

PowerPacks can be used to upgrade to more powerful software. The licensee receives a new license agreement and CoL (Certificate of License) with the PowerPack. This CoL, together with the CoL for the original product, proves that the new software is licensed.
A separate PowerPack must be purchased for each original license of the software to be replaced.

Upgrade

An upgrade permits the use of a new version of the software on the condition that a license for a previous version of the product is already held.
The licensee receives a new license agreement and CoL with the upgrade. This CoL, together with the CoL for the previous product, proves that the new version is licensed.
A separate upgrade must be purchased for each original license of the software to be upgraded.

© Siemens 2025

Overview

ServicePack

ServicePacks are used to debug existing products.
ServicePacks may be duplicated for use as prescribed according to the number of existing original licenses.

License key

Siemens Digital Industries and Smart Infrastructure supplies software products with and without license keys.

The license key serves as an electronic license stamp and is also the "switch" for activating the software (floating license, rental license, etc.).

The complete installation of software products requiring license keys includes the program to be licensed (the software) and the license key (which represents the license).

Software Update Service (SUS)

As part of the SUS contract, all software updates for the respective product are made available to you free of charge for a period of one year from the invoice date. The contract will automatically be extended for one year if it is not canceled three months before it expires.

The possession of the current version of the respective software is a basic condition for entering into an SUS contract.

You can download explanations concerning license conditions from
https://mall.industry.siemens.com/legal/ww/en/terms_of_trade_en.pdf

© Siemens 2025

Conversion tables

Rotary inertia (to convert from A to B, multiply by entry in table)

A \ B	lb-in^2	lb-ft^2	lb-in-s^2	lb-ft-s^2 slug-ft^2	kg-cm^2	kg-cm-s^2	gm-cm^2	gm-cm-s^2	oz-in^2	oz-in-s^2
lb-in^2	1	6.94×10^{-3}	2.59×10^{-3}	2.15×10^{-4}	2.926	2.98×10^{-3}	2.92×10^{3}	2.984	16	4.14×10^{-2}
lb-ft^2	144	1	0.3729	3.10×10^{-2}	421.40	0.4297	4.21×10^{5}	429.71	2304	5.967
lb-in-s^2	386.08	2.681	1	8.33×10^{-2}	1.129×10^{3}	1.152	1.129×10^{6}	1.152×10^{3}	6.177×10^{3}	16
lb-ft-s^2 slug-ft^2	4.63×10^{3}	32.17	12	1	1.35×10^{4}	13.825	1.355×10^{7}	1.38×10^{4}	7.41×10^{4}	192
kg-cm^2	0.3417	2.37×10^{-3}	8.85×10^{-4}	7.37×10^{-5}	1	1.019×10^{-3}	1000	1.019	5.46	1.41×10^{-2}
kg-cm-s^2	335.1	2.327	0.8679	7.23×10^{-2}	980.66	1	9.8×10^{5}	1000	5.36×10^{3}	13.887
gm-cm^2	3.417×10^{-4}	2.37×10^{-6}	8.85×10^{-7}	7.37×10^{-8}	1×10^{-3}	1.01×10^{-6}	1	1.01×10^{-3}	5.46×10^{-3}	1.41×10^{-5}
gm-cm-s^2	0.335	2.32×10^{-3}	8.67×10^{-4}	7.23×10^{-5}	0.9806	1×10^{-3}	980.6	1	5.36	1.38×10^{-2}
oz-in^2	0.0625	4.34×10^{-4}	1.61×10^{-4}	1.34×10^{-5}	0.182	1.86×10^{-4}	182.9	0.186	1	2.59×10^{-3}
oz-in-s^2	24.13	0.1675	6.25×10^{-2}	5.20×10^{-3}	70.615	7.20×10^{-2}	7.09×10^{4}	72.0	386.08	1

Torque (to convert from A to B, multiply by entry in table)

A \ B	lb-in	lb-ft	oz-in	N-m	kg-cm	kg-m	gm-cm	dyne-cm
lb-in	1	8.333×10^{-2}	16	0.113	1.152	1.152×10^{-2}	1.152×10^{3}	1.129×10^{6}
lb-ft	12	1	192	1.355	13.825	0.138	1.382×10^{4}	1.355×10^{7}
oz-in	6.25×10^{-2}	5.208×10^{-3}	1	7.061×10^{-3}	7.200×10^{-2}	7.200×10^{-4}	72.007	7.061×10^{4}
N-m	8.850	0.737	141.612	1	10.197	0.102	1.019×10^{4}	1×10^{7}
kg-cm	0.8679	7.233×10^{-2}	13.877	9.806×10^{-2}	1	10^{-2}	1000	9.806×10^{5}
kg-m	86.796	7.233	1.388×10^{3}	9.806	100	1	1×10^{5}	9.806×10^{7}
gm-cm	8.679×10^{-4}	7.233×10^{-5}	1.388×10^{-2}	9.806×10^{-5}	1×10^{-3}	1×10^{-5}	1	980.665
dyne-cm	8.850×10^{-7}	7.375×10^{-8}	1.416×10^{-5}	10^{-7}	1.0197×10^{-6}	1.019×10^{-8}	1.019×10^{-3}	1

Length (to convert from A to B, multiply by entry in table)

A \ B	inches	feet	cm	yd	mm	m
inches	1	0.0833	2.54	0.028	25.4	0.0254
feet	12	1	30.48	0.333	304.8	0.3048
cm	0.3937	0.03281	1	1.09×10^{-2}	10	0.01
yd	36	3	91.44	1	914.4	0.914
mm	0.03937	0.00328	0.1	1.09×10^{-3}	1	0.001
m	39.37	3.281	100	1.09	1000	1

Power (to convert from A to B, multiply by entry in table)

A \ B	hp	Watts
hp (English)	1	745.7
(lb-in) (deg./s)	2.645×10^{-6}	1.972×10^{-3}
(lb-in) (r/min)	1.587×10^{-5}	1.183×10^{-2}
(lb-ft) (deg./s)	3.173×10^{-5}	2.366×10^{-2}
(lb-ft) (r/min)	1.904×10^{-4}	0.1420
Watts	1.341×10^{-3}	1

Force (to convert from A to B, multiply by entry in table)

A \ B	lb	oz	gm	dyne	N
lb	1	16	453.6	4.448×10^{5}	4.4482
oz	0.0625	1	28.35	2.780×10^{4}	0.27801
gm	2.205×10^{-3}	0.03527	1	1.02×10^{-3}	N.A.
dyne	2.248×10^{-6}	3.59×10^{-5}	980.7	1	0.00001
N	0.22481	3.5967	N.A.	100000	1

Mass (to convert from A to B, multiply by entry in table)

A \ B	lb	oz	gm	kg	slug
lb	1	16	453.6	0.4536	0.0311
oz	6.25×10^{-2}	1	28.35	0.02835	1.93×10^{-3}
gm	2.205×10^{-3}	3.527×10^{-2}	1	10^{-3}	6.852×10^{-5}
kg	2.205	35.27	10^{3}	1	6.852×10^{-2}
slug	32.17	514.8	1.459×10^{4}	14.59	1

Rotation (to convert from A to B, multiply by entry in table)

A \ B	r/min	rad/s	degrees/s
r/min	1	0.105	6.0
rad/s	9.55	1	57.30
degrees/s	0.167	1.745×10^{-2}	1

© Siemens 2025

Temperature Conversion

°F	°C	°C	°F
0	–17.8	–10	14
32	0	0	32
50	10	10	50
70	21.1	20	68
90	32.2	30	86
98.4	37	37	98.4
212	100	100	212
subtract 32 and multiply by $^5/_9$		multiply by $^9/_5$ and add 32	

Mechanism Efficiencies

Acme-screw with brass nut	~0.35–0.65
Acme-screw with plastic nut	~0.50–0.85
Ball-screw	~0.85–0.95
Chain and sprocket	~0.95–0.98
Preloaded ball-screw	~0.75–0.85
Spur or bevel-gears	~0.90
Timing belts	~0.96–0.98
Worm gears	~0.45–0.85
Helical gear (1 reduction)	~0.92

Friction Coefficients

Materials	μ
Steel on steel (greased)	~0.15
Plastic on steel	~0.15–0.25
Copper on steel	~0.30
Brass on steel	~0.35
Aluminum on steel	~0.45
Steel on steel	~0.58

Mechanism	μ
Ball bushings	<0.001
Linear bearings	<0.001
Dove-tail slides	~0.2++
Gibb ways	~0.5++

Material Densities

Material	lb-in^3	gm-cm^3
Aluminum	0.096	2.66
Brass	0.299	8.30
Bronze	0.295	8.17
Copper	0.322	8.91
Hard wood	0.029	0.80
Soft wood	0.018	0.48
Plastic	0.040	1.11
Glass	0.079–0.090	2.2–2.5
Titanium	0.163	4.51
Paper	0.025–0.043	0.7–1.2
Polyvinyl chloride	0.047–0.050	1.3–1.4
Rubber	0.033–0.036	0.92–0.99
Silicone rubber, without filler	0.043	1.2
Cast iron, gray	0.274	7.6
Steel	0.280	7.75

Wire Gauges[1)]

Cross-section mm^2	Standard Wire Gauge (SWG)	American Wire Gauge (AWG)
0.2	25	24
0.3	23	22
0.5	21	20
0.75	20	19
1.0	19	18
1.5	17	16
2.5	15	13
4	13	11
6	12	9
10	9	7
16	7	6
25	5	3
35	3	2
50	0	1/0
70	000	2/0
95	00000	3/0
120	0000000	4/0
150	–	6/0
185	–	7/0

[1)] The table shows approximate SWG/AWG sizes nearest to standard metric sizes; the cross-sections do not match exactly.

© Siemens 2025

Conditions of sale and delivery

1. General Provisions

1.1 Scope

The purchase of hardware, software, cloud services and other services (collectively “Offerings”) through this catalog from Siemens Aktiengesellschaft (“Siemens”) is subject to the following General Terms and Conditions for the sale of Siemens Offerings ("Catalog T&C”). These Catalog T&C apply only for orders placed with Siemens in Germany. Customer means the entity that places an order via Siemens.

1.2 Order Process

If Customer writes something in the "free choice text" (F), it is solely for Customer’s internal order processing and is not reviewed or taken into consideration by Siemens and will not be legally binding.

1.3 Formation of contract

Any information provided in this catalog or in SiePortal does not constitute a binding offer and may contain errors. In particular, illustrations contained in the Offering descriptions, or in Siemens’ catalogs are not binding. Any data, statement to dimensions and weights in our Offering descriptions and catalogs are subject to change without prior notice and become only binding upon contract conclusion.

An individual contract between Siemens and Customer is established when Siemens expressly accepts an order from Customer electronically or in another form, or if such acceptance does not occur, when Siemens fulfills Customer's order through delivery or performance. When the order is placed in SiePortal Siemens will send Customer an electronic confirmation of the receipt of the order, which, however, does not constitute an acceptance of the order. Neither is the Customer obligated to place an order, nor is Siemens obligated to accept any orders placed by Customer.

1.4 Additional Terms

Subordinately to these Catalog T&C, the specific terms and conditions in the text of the product description (if available) apply. If the text of the product description says that the specific terms and conditions mentioned there apply exclusively, only those specific terms and conditions apply. If the text of the product description does not contain any specific terms and conditions or if the specific terms and conditions mentioned there do not apply exclusively, the following terms and conditions apply subordinately in the version valid at the time of contract conclusion:

1.4.1 Hardware

b. "General Conditions for the Supply of Products and Services of the Electrical and Electronics Industry (“Grüne Lieferbedingungen”- GL)"[1] and
c. the Siemens’ "Terms on Export Control and Electronically Order Processing"[1].

If the hardware contains open-source software those terms prevail over the GL, we will provide a notification with the hardware specifying the applicable terms. The same applies with respect to any third-party software components in the hardware.

1.4.2 Other Offerings than hardware

a. for software on premise including any associated maintenance and support services:
the "General Software and Cloud Supplemental Terms (AGB Germany)"[2] and the ""Specific Supplemental Terms for on-premises Software of Infrastructure & Industry Business"[2];
b. for cloud services:
the "General Software and Cloud Supplemental Terms (AGB Germany)"[2] and the cloud services product specific terms stated in the product description;
c. for services:
the "Services Supplemental Terms (AGB Germany)"[2]; and
d. generally for all Offerings under a. - c.:
"Base Terms Germany (AGB Germany)"[2].

1.5 Customers with master or frame agreement

To the extent Offerings purchased are covered by an existing master or frame agreement, the terms and conditions of that agreement shall apply instead of these Catalog T&C.

1.6 Payment agreement and data sharing

If Customer can select and selects that a payment agreement shall apply to the order, upon conclusion of the order the payment agreement will apply and prevail over these Catalog T&C.

For the assessment of financing options, Siemens shares information and data in relation to Customer's company obtained within the scope of its business relationship with its affiliates (as defined in the Base Terms Germany (AGB Germany)).

[1] Download under www.siemens.com/sts-base-terms-deu
[2] Download under www.siemens.com/sts-st-deu

© Siemens 2025

2. Prices, payment terms and price escalation

2.1 Prices

The prices are in € (Euro), EXW INCOTERMS®2020, exclusive packaging.

2.2 Taxes

All prices and expenses stated in the order are exclusive of any taxes, duties, tariffs and any other charges ("Tax"). Customer will pay or refund Siemens for any applicable Tax imposed by any government authority for Customer's use or receipt of the Offerings.

If Customer is exempt from value-added or sales tax, or similar taxes, it must provide a valid, timely, and executed exemption certificate, direct pay permit, or other such government-approved documentation.

If Customer is required by law to deduct or withhold Tax, Customer will increase the amount it pays to Siemens so that Siemens still receives the amount originally invoiced. Customer will promptly provide all tax receipts confirming it has paid Tax or has withheld Tax.

2.3 Price escalation

2.3.1 Price escalation for metal surcharges

To account for fluctuations commodity prices (silver, copper, aluminum, lead, gold, dysprosium and/or neodymium), surcharges will apply to Offerings containing these metals. Surcharges are calculated daily using the Offering's Metal Factor, which defines the applicable commodity and pricing methods. Details are provided in the exhibit "Metal surcharges"[3]. The surcharges calculated by using these pricing methods will be added to the Offering's price.

If applicable, the Metal Factor is shown with the Offering's price information or listed on SiePortal (https://sieportal.siemens.com).

2.3.2 General price escalation

If, between ordering and delivery, there are any new or modified taxes, duties, tariffs, or equivalent measures that are directly or indirectly applicable to Siemens' offering, including any hardware, software, or service components contained therein, or a price increase of more than 20% for relevant commodities (e.g. electronic components, semiconductors) applies, Siemens reserves the right to adjust the price accordingly.

2.4 Price Changes

Prices stated in the SiePortal or in Siemens' catalogs are subject to change without prior notice.

3. Units of measurement and weight

The dimensions and weight of all Offerings are given in meters and kilograms. If the dimensions or weight of the Offerings are specified in other units of measurement, such as inches or pounds, this indicates that these Offerings are intended for export.

[3] Download under https://mall.industry.siemens.com/legal/de-en/LKB002966.pdf

© Siemens 2025

Notes

© Siemens 2025

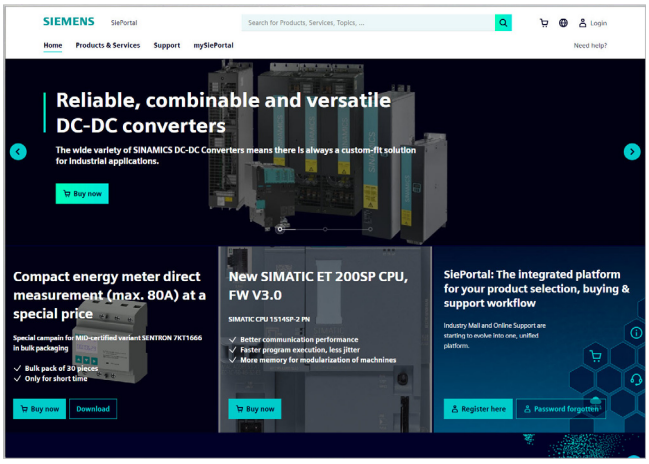

Easy product selection and ordering with SiePortal

SiePortal > Products & Services

The internet ordering platform of Siemens AG is located in SiePortal. It provides you with online access to a comprehensive product spectrum that is presented in an informative, well-organized way.

Powerful search functions help you select the required products, while configurators enable you to configure complex product and system components quickly and easily. CAx data are also available for you to use.

Data transfer allows the entire procedure, from selection through ordering to tracking and tracing, to be carried out online. Availability checks, individual customer discounting, and quotation preparation are also possible.

https://sieportal.siemens.com

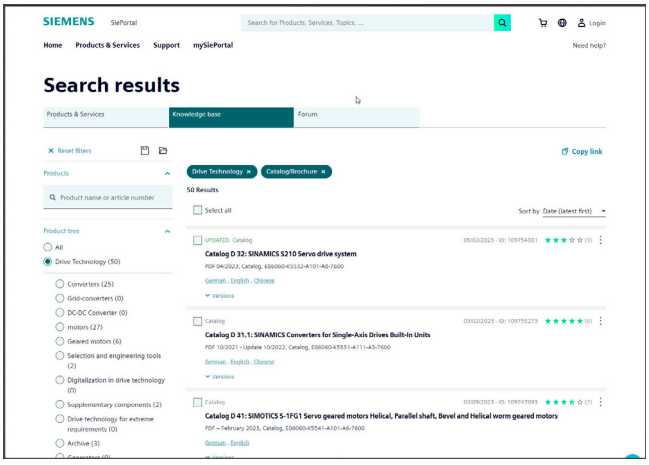

Downloading catalogs

SiePortal > Support > Knowledge base

You can download catalogs and brochures in PDF format from Siemens Industry Online Support without having to register.

The filter box makes it possible to perform targeted searches.

https://sieportal.siemens.com

© Siemens 2025

Cybersecurity information

Siemens provides products and solutions with industrial cybersecurity functions that support the secure operation of plants, systems, machines and networks.

In order to protect plants, systems, machines and networks against cyber threats, it is necessary to implement – and continuously maintain – a holistic, state-of-the-art industrial cybersecurity concept. Siemens' products and solutions constitute one element of such a concept.

Customers are responsible for preventing unauthorized access to their plants, systems, machines and networks. Such systems, machines and components should only be connected to an enterprise network or the internet if and to the extent such a connection is necessary and only when appropriate security measures (e.g. firewalls and/or network segmentation) are in place.

For additional information on industrial cybersecurity measures that may be implemented, please visit
www.siemens.com/cybersecurity-industry

Siemens' products and solutions undergo continuous development to make them more secure. Siemens strongly recommends that product updates are applied as soon as they are available and that the latest product versions are used. Use of product versions that are no longer supported, and failure to apply the latest updates may increase customer's exposure to cyber threats.

To stay informed about product updates, subscribe to the Siemens Industrial Cybersecurity RSS Feed under
www.siemens.com/cert

Get more information

The SINAMICS converter family:
www.siemens.com/sinamics

SIMOTICS motors for industry:
www.siemens.com/simotics

Motion Control Systems and Solutions for production machine and machine tool equipment:
www.siemens.com/motioncontrol

Local partners worldwide:
www.siemens.com/automation-contact

Published by
Siemens AG

Digital Industries
Motion Control
Postfach 31 80
91050 Erlangen, Germany

For the U.S. published by
Siemens Industry Inc.

100 Technology Drive
Alpharetta, GA 30005
United States

PDF (E86060-K5537-A111-A3-7600)
V6.MKKATA.GMC.140
KG 1125 162 En
Produced in Germany
© Siemens 2025

Subject to changes and errors. The information given in this document only contains general descriptions and/or performance features which may not always specifically reflect those described, or which may undergo modification in the course of further development of the products. The requested performance features are binding only when they are expressly agreed upon in the concluded contract.

All product designations may be trademarks or product names of Siemens AG or other companies whose use by third parties for their own purposes could violate the rights of the owners.